JAMES B. GLASCOCK, ARCHITECT P.C.
ARCHITECTURE & PLANNING
[redacted]
e-mail: glascock@mtcon.net

July 25, 2017

Salt Lake Costume Project
1701 South 1100 East
Salt Lake City, Utah 84120

Planned Development Application

Request - Revised

1. Permit the Allowable Parapet Height and Roof to be 5'-0" above the permitted height in the RB Zone from 30' above Finished Grade to 35'-0" above existing grade. The Existing Top of Parapet and Top of Building is currently at 33'-6" above finished grade and the current plans show the New Top of Parapet and Top of Bldg is the same at 33'-6". This would allow the Architect and Structural Engineer to adjust the final heights of the roof and floors as needed to resolve some complex existing and unknown connection heights to the existing building bearing walls. The intent would be to finish the building within the 33'-6" but allows the architect some flexibility during the remodel stage.
2. The Existing Iconic and Historical "Knight" sign on the Northwest Building Corner is intended to Remain in Place and will ***not*** be moved, extended, altered or changed in any way. The Existing Sign is in good shape and has relatively no deterioration. The only corrections would be to Re-Paint the sign to Match the Existing Colors and to Re-pair any current Structural Connections to ensure the safety of the Existing Sign and Existing Front Canopy. We will modify the Existing Canopy with new roofing, edge cap and paint. This will preserve one of the most known Icons in the Sugarhouse Area
3. Permit the Use of new historic type "Water Towers" on the roof to replace the Existing Metal Cell Towers. There are three (3) Existing Cell Towers and our plan is to replace the three with two (2) New Water Towers for the cell service equipment. The Three Existing Cell Towers are 9 FT High above the roof parapet x 10 FT wide x 10 FT deep. Two are very close to the roof edge and can easily be seen at street level. Our Proposed Water Towers are centered in the middle of the roof east to west and set back 1/3 the length of the roof from the north and south roof edges. They would only be seen from a distance. Attached are some photos that show the existing cell towers from the street level, roof level and Birdseye level for clarity.
4. The zoning code will only allow the decorative balconies and planters on 1700 South and 1100 East to extend only 4" from the new building face. We would request that these items be allowed to extend to 12" from the building face for better architectural definition. The site plan is at such a scale that you won't see the 12" extension clearly. The Existing Elevations show the 4" required depth on the North (1700 South) and West (1100 East) to meet zoning requirements. The other two elevations are shown at 12" from the building face since they are not within the minimum setbacks required. I have attached Sheet A-3.1, Third Floor plan which shows the 4" balconies on the north and west. Grids A and 1 are the face of the existing foundation. It is important to note that neither the requested 12" deep balconies nor the 12" deep planters on 1100 East or 1700 South will extend over the property line at any point. They will extend 8" further into the setbacks on those two streets 8" further than is allowed by code.

Project Description- Revised

The current structure has been vacant for nearly 12 years and without some relief will remain vacant until some developer purchases the property as a tear down. Under the current RO setbacks, this would only allow a Convenience Store, Gas Station or Fast Food, which is not in the interests of what is a Prime Gateway Entry to the Westminster and Sugarhouse Area. The south half of the building was original constructed in the late 1800's as a lumberyard building. Later is was obtained by Westminster College and a new north end was constructed as their Chapel with many decorative features, such as twin bell towers with stained glass on the north end and connected to the lumberyard building. Sometime around WW II, the building was converted to the Costume Company with at least two additions and two floors added. The additions were constructed with non-descript non-matching brick and concrete block and the bell towers were re-configured into an elevator and storage and the distinctive bell tower features removed. The walls were left as new brick and the original building was covered with a hard non-removable stucco. At least the Iconic "Knight" sign was added to give the structure some design. After the Costume Company went out of business, an interior design and kitchen cabinet business took over and added the black awnings to further de-grade the building. After they went out of business, the structure has sat vacant with no improvements made. There is a very tall evergreen tree barrier that was installed at some time at the east parking lot and remains as a significant visual and sound barrier and we would maintain this barrier to protect the adjacent homeowners to the east. There have been a half-dozen recent design attempts to remodel the building but all have been architecture that adds nothing to the flavor the Neighborhood deserves, all being very modern in design.

Our proposed use would be to create an apartment building that would create a vision of what historically should be done with all new buildings that act as a Gateway to the Westminster and Sugarhouse Area. We have researched structures built at the turn of the century through the 1920's in Salt Lake, Chicago and New York in gentrified areas. We want to combine this sense of historical flavor with our proposed new development that addresses the growing need for urban living for the selective millennial population. It is our intent to provide a residential and live work opportunity to meet the demand for a downtown lifestyle in the Sugar House area. With expansive ceilings, state of the art appliances, yet a 1920's vintage look, we will provide quaint living in the heart of Salt Lake's emerging most sought after neighborhood. We will add an antique distressed brick veneer to all facades (existing and new) to cover the existing surfaces, add steel elements indicative of architecture of that period, add historical elements to the façade such as the flags and balconies, especially the Iconic "Knight" sign and roof elements such as the water towers that enhance and strengthen our design concept. We will meet all building, fire, zoning and engineering requirements and will bring new life to a building that needs architectural attention. We have added a significant amount of glass at the pedestrian street level for additional softening of the building at eye level. We believe strongly that our somewhat modified "historical" design approach is what the master planning for the Sugarhouse area intended and that our building will provide a significant architecture feature to what is an immensely important "Gateway" entrance to Sugarhouse and would serve as a design guideline for future new and remodeled buildings in the area.

Planned Development Information

The following will be an item by item response to the criteria in the application:

a. The proposed existing building remodel and additions will follow the same building setbacks and current parapet of the existing. The remodeled building and addition will create a design of architecture up to 1920 period. The existing building and new additions will be finished with a distressed brick veneer to mimic the brick used and aged from that period. We have added numerous architectural features that take the building from a commercial/ light industrial "plain jane" look to an exciting historical residential feel that will enhance the surrounding neighborhood. We have added period historical elements such as balconies, flags, water towers to mask the cell towers, steel arch elements and stone base and wainscot to continue our theme. We would want to keep and re-furbish the Iconic "Knight" Sign as a historical feature well known in the Salt lake Environs.
b. We will keep the site slopes as they exist and minimize the land reshaping. We will keep and maintain the tall evergreen tree barrier that was installed at some time at the east parking lot and it will remain as a significant visual and sound barrier.
c. Although this building has undergone numerous remodels and additions, most that have negatively affected the building, it is still an important element in the neighborhood fabric. Many Salt Lake Residents have memories of this building both as a chapel and the best costume rental business. I remember coming to the building in 1955 to be fitted for a costume for school ceremony. The "Knight" sign is historically significant and needs to be saved and kept for future generations of a sign of past times. Our plan recognizes the importance of the building and its place in the neighborhood.
d. The building design with period brick veneer, glazing at the pedestrian level, the addition of historical architectural elements, maintaining the existing east evergreen barrier, the work-live element to the building, adding residents, all add to a better visual experience and environment to the neighborhood. This is significantly light years better than the obvious other probable uses of a Convenience Store, Gas Station or Fast Food Establishment.
e. We have already enumerated the many special design amenities that would be of interest to the general public. Please refer to Items #a, c and d above.
f. We will eliminate the existing blighted structure, but not by removing it and replacing it, but by rehabilitation through remodeling and adding to it. We believe that tearing down an old building is against the belief that we should maintain our history and preserve it.
g. We will provide 19 new housing or apartment units that will be rented at market rates.
h. We are planning on using many green building techniques. First and foremost, we are not tearing the building down, but building onto the existing structure and not wasting materials. We are moving one existing wood floor down and the existing wood roof up to re-use existing building materials. Any wood and brick materials that are demolished will be re-used wherever possible to minimize materials going to waste. All new materials used are "green" and re-useable such as brick, steel, concrete block, wood, concrete and new apartment units will use bamboo floors and energy star rated appliances.

James B. Glascock, Architect

Google Maps 1089 E 1700 S

Image capture: May 2016 © 2017 Google United States

Salt Lake City, Utah

Street View - May 2016

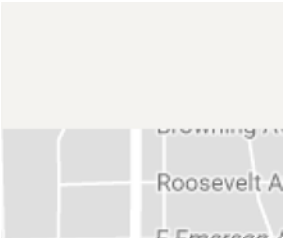

REMODEL PLANS

FOR:
SALT LAKE COSTUME BUILDING
1701 SOUTH 1100 EAST
SALT LAKE CITY, UTAH 84120

ARCHITECT PROJECT #15-027
DATE: FEBRUARY 03, 2017 - ORIGINAL PERMIT REVIEW SET
DATE: APRIL 04, 2017 -REVISED PERMIT REVIEW AND BID SET

1 04-05-17 - SLC DEPT PLAN REVIEWS AND OWNER VALUE ENGINEERING CORRECTIONS

OWNER

SALT LAKE COSTUME PROPERTIES, INC
CONTACT: JAMES HARDY
1706 SOUTH 500 WEST
BOUNTIFUL, UTAH 84010
OFFICE PHONE (801) 975-0222
EMAIL: JAMES@JLHARDY.COM

GENERAL CONTRACTOR

JL HARDY CONSTRUCTION, INC.
UTAH STATE CONTRACTORS LICENSE: 252733-5501
CONTACT: JAMES HARDY
1706 SOUTH 500 WEST
BOUNTIFUL, UTAH 84010
OFFICE PHONE (801) 975-0222
EMAIL: JAMES@JLHARDY.COM

James B. Glascock, Architect P.C.
Architecture ▪ Planning
4897 REBECCA CIRCLE
SALT LAKE CITY, UTAH 84117
PHONE (801) 272-5133
GLASCOCK@MTCON.NET
UTAH ARCHITECT LICENSE #10036

CONTACT: JAMES GLASCOCK
PHONE (801) 272-5133
GLASCOCK@MTCON.NET

CONSULTANTS

STRUCTURAL ENGINEER
REALIZE STRUCTURAL ENGINEERING, INC.
CONTACT: RUSSELL MERRILL SE #184004
2880 WEST 4700 SOUTH, SUITE A
WEST VALLEY CITY, UTAH 84129
OFFICE PHONE (801) 930-9625
EMAIL: INFO@REAL-SE.COM

CIVIL ENGINEER:
CIR ENGINEERING, L.L.C.
CONTACT: SCOTT THORSEN, PE # 354291
3032 SOUTH 1030 WEST, SUITE 202
SALT LAKE CITY, UTAH 84119
PHONE (801) 949-6296
E-MAIL: SCOTT@CIRENGINEERING.COM

ELECTRICAL ENGINEER:
DEAN ENGINEERING
CONTACT: DEAN LEVORSEN PE # 154867
459 WILLOW SPRINGS LANE
DRAPER, UTAH 84020
PHONE (801) 243-0854
E-MAIL: DEANLEVORSEN@MSN.COM

LANDSCAPE ARCHITECT:
RDL DESIGN COMPANY, INC
CONTACT: ROBERT D LIEN LA #10636
1020 EAST YALE AVENUE
SALT LAKE CITY, UTAH 84105
PHONE (801) 647-3114
E-MAIL: RDLDESIGN@COMCAST.NET

MECHANICAL ENGINEER:
DALE R. WILDE COMPANY
CONTACT: RAY WILDE PE # 1558674
1106 EAST 2700 SOUTH
SALT LAKE CITY, UTAH 84106
PHONE (801) 433-1125 FAX (801) 486-0744
E-MAIL: WILDE@DRWCO.COM

GEOTECHNICAL ENGINEER:
GSH GEOTECHNICAL, INC
CONTACT: WILLIAM G TURNER PE # 171715
CONTACT: WILIAM BE TURNER PE # 162291
473 WEST 4800 SOUTH
SALT LAKE CITY, UTAH 84123
PHONE (801) 685-9190
E-MAIL: GSHGEO.COM

2015 EDITIION IBC - CODE ANALYSIS

1. APPLICABLE CODES:
   CURRENT SALT LAKE CITY ORDINANCES
   CURRENT STATE OF UTAH ADOPTED AMENDMENTS
   2015 INTERNATIONAL BLDG CODE (IBC) INCLUDING APPENDIX J
   2015 INTERNATIONAL PLUMBING CODE (IPC)
   2015 INTERNATIONAL FUEL & GAS CODE (IFGC)
   2015 INTERNATIONAL MECHANICAL CODE (IMC)
   2015 INTERNATIONAL ENERGY CONSERVATION CODE (IECC)
   2011 NATIONAL ELECTRICAL CODE (NEC)
   2015 INTERNATIONAL FIRE CODE (IFC)
   ANSI A-117.1/2011 ACCESSIBLE CODE
2. THE EXISTING BLDG IS AN EXISTING THREE STORY BLDG WITH A SMALL PARTIAL BASEMENT FOR STORAGE AND MECHANICAL. ALL UTILITIES ARE ALREADY STUBBED INTO THE BUILDING. THE BUILDING IS A NON-REINFORCED MASONRY BLDG ORIGINALLY BUILT AROUND 1920 WITH ADDITIONS & REMODELS ASSUMED TO HAVE BEEN DONE IN THE 1930-1960 PERIOD. THE ORIGINAL BUILDING WAS A LUMBER SHOP, THEN A CHURCH AND SOMETIME IN THE 1940-1950 PRIOD USED AS A RETAIL COSTUME RENTAL BUSINESS UNTIL THE BLDG WAS SOLD. IT HAS SINCE BEEN USED AS A RETAIL DESIGNER SPAICE AND RECENTLY VACATED. THE REQUIRED PARKING IS EXISTING FOR THE BLDG. THIS BUILDING IS CURRENTLY ASSUMED TO BE A TYPE VB-SM NON-RATED BUILDING PER EXISTING CONSTRUCTION. THE PROPOSED TYPE OF CONSTRUCTION AFTER THE REMODEL WILL BE OCCUPANCY GROUP R-2 AND IS TO BE TYPE VB-SM (NON-RATED).
3. THE EXISTING FIRE SPRINKLER SYSTEM (NOW VACATED) WILL BE REMOVED AND A COMPLETE NEW SYSTEM WILL BE INSTALLED TO MEET SECTION 903. THIS WILL BE A DEFERRED SUBMITTAL DIRECTLY FROM THE FIRE SPRINKLER SUB-CONTRACTOR. THE FIRE ALARM SYSTEM WILL ALL BE A DESIGN-BUILD SYSTEM AND IS TO BE A DEFERRED SUBMITTAL ITEM.
4. THE SQUARE FOOTAGE OF THIS PROPOSED BUILDING REMODEL IS AS FOLLOWS WITH PROPOSED NUMBER OF UNITS:
   BASEMENT ▪ 1,884 GROSS SF ▪ PARTIAL BSMT OF 1 LIVE/WORK A ▪ 724 GROSS SF
   MAIN FLOOR ▪ 4,823 GROSS SF ▪ 4 ONE-BEDROOM APTS ▪ 3,405 GROSS SF
   UNITS 101 IS A TYPICAL APT AND
   UNITS 102, 103 AND 104 ARE LIVE WORK UNITS
   SECOND FLOOR ▪ 7,230 GROSS SF ▪ 8 ONE-BEDROOM APT ▪ 5,994 GROSS SF
   THIRD FLOOR ▪ 7,230 GROSS SF ▪ 5 ONE-BDRM +TWO 2-BDRM APT ▪ 6,147 GROSS SF
   TOTAL BLDG 1 21,167 GROSS SF ▪ 19 TOTAL APT ▪ 16,270 GROSS SF
5. PER TABLE 504.3 FOR OCCUPANCY GROUP R-2, TYPE VB-SM CONSTRUCTION, THE MAXIMUM ALLOWABLE HEIGHT = 60 FT AND MAXIMUM FINISHED HEIGHT ABOVE GRADE AT HIGHEST POINT WILL BE 34'-6" AND PER TABLE 504.4 THE ALLOWABLE # OF STORIES IS 3 AND THE BLDG HAS 3. PER TABLE 506.2 THE ALLOWABLE AREA FOR TYPE VB-SM IS 21,000 SF. PER 506.3.2 F= 30/9 AND BLDG PERIMETER ON 3@+ FT YARDS = 38.3 AND W=59.44. PER SECTION 506.3.3,FRONTAGE INCREASE = I = (30/9 / 38.3 = .01.25) 59.44 /30 = 59.44/ 30 = 1.10. TOTAL ALLOWABLE AREA = (21,000 X 1.0) X 3 = (63,300 SF. ACTUAL = 28,397 GROSS SF.
6. THE BUILDING HAS A MINIMUM FIRE SEPARATION DISTANCE OF 73 FT+ ON NORTH (170 SOUTH), 54'-8"+ ON WEST (100 EAST), 53'-6"+ ON EAST AND 21'-2" ON THE SOUTH (INCLUDES THE ALLEY WIDTH). FOR TYPE VB-SM OCCUPANCIES PER TABLE 601 ALL BLDG ELEMENTS CAN BE NON-RATED AND PER TABLE 602 ALL EXTERIOR WALLS GREATER THAN 10 FT & LESS THAN 30 FT CAN BE NON-RATED. ALL EXTERIOR WALLS WILL BE NON RATED. MAXIMUM AREA OF UNPROTECTED OPENINGS ALLOWED FOR FIRE SPRINKLERED BLDGS GREATER THAN 20 FT IS UNLIMITED.
7. UNIT SEPARATION PER SECTIONS 420.2 AND 708 IS TO BE 1/2 HR-RATED WITH SPRINKLER SYSTEM AND HORIZONTAL FLOOR/CEILING SEPARATION PER SECTIONS 420.3 AND 711 IS TO BE 1/2 HR-RATED WITH SPRINKLER SYSTEM. UNIT SEPARATION FROM CORRIDORS PER SECTIONS 708.3 AND 1020.1 AND TABLE 1020.1 SHALL BE 1/2 HR-RATED WITH SPRINKLER SYSTEM. DOORS IN 1/2 HR RATED CORRIDORS TO BE 1/3 HR-RATED (20 MIN) DOORS AND FRAMES, 1-HR RATED FLOOR AND WALL RATED ASSEMBLIES WILL BE USED. SHAFT AND STAIR ENCLOSURES WILL BE 1-HR RATED AND DOOR AND WINDOW OPENINGS IN SHAFTS SHALL BE 1-HR RATED PER TABLE 716.5.
8. PER TABLE 803.11 WITH FIRE SPRINKLERS FOR R-2 OCCUPANCY ALL INTERIOR FINISH MATERIALS SHALL BE CLASS C.
9. REQUIRED # OF EXITS AND WIDTH PER TABLES 1004.1.2, 1006.2.1, 1006.3.1, 10 AND 1015 (USED R-2 OCCUPANCY OF 200 SF FOR SF/OCC LOAD PER THE GROSS APT SF (DID NOT INCLUDE CORRIDORS, ETC)
   BASEMENT - PARTIAL LIVE/WORK APT ▪ 724 SF/200 SF = 4 OCC ▪ 1 EXIT REQ'D AND 1 EXIT PROVIDED THRU SAME APT FLOOR ABOVE
   BASEMENT - TENANT STORAGE ▪ 1,160 SF/500 SF = 2 OCC ▪ 1 EXIT REQ'D AND 1 PROVIDED
   MAIN FLOOR (4 - 1 BDRM APTS) ▪ 3,405 SF/200 SF= 17 OCC ▪ 2 EXITS REQ'D AND 4 PROVIDED EACH APT HAS DIRECT EXIT TO MAIN LEVEL
   2ND FLOOR (8 - 1 BDRM APTS ▪ 5,994 SF/200 SF= 30 OCC▪ 2 EXITS REQ'D AND TWO EXIT STAIRS PROVIDED
   3RD FLOOR (5 - 1 BDRM APTS AND 2 - 2 BDRM APTS) ▪ 6,147 SF/200 SF= 31 OCC▪ 2 EXITS REQ'D AND TWO EXIT STAIRS PROVIDED
   PER SECTION 1011.2 EXCEPTION #1, THE MINIMUM REQUIRED STAIR WIDTH IS 36" CLEAR AT ALL STAIRS. THE TWO STAIRS ARE IN 1-HR RATED ENCLOSURES WITH WIDTHS OF 44" ON ONE STAIR AND 42" ON THE OTHER. THE STAIR ENTRANCE DOORS ARE SEPARATED BY GREATER THAN 1/3 THE BLDG DIAMETER PER SECTION 1007.1.1.1. THE LARGEST BLDG DIAGONAL = 126'-5" AND THE DISTANCE BETWEEN THE CENTER JAMB WIDTH OF BOTH STAIR EXIT DOORS = 42'-2" = GREATER THAN 1/3 THE BLDG DIAMETER 42'-1 5/8".
10. MAXIMUM ALLOWABLE TRAVEL DISTANCE PER TABLE 1017.2 (SPRINKLERED) = 250 FT AND ALL DISTANCES IN THE PROPOSED BUILDING DESIGN ARE WITHIN THE ALLOWABLE. ALL DEAD ENDS ARE LESS THAN 100 FT PER 1024.4.
11. EXIT SIGNS PER SECTION 1013 AND EXIT ILLUMINATION PER SECTION 1008 WITH BATTERY BACK-UP ARE SHOWN ON THE ELECTRICAL PLANS AT EACH STAIR AND EXIT DOOR LOCATION.
12. FOUR (4) FIRE EXTINGUISHERS (FE) ARE REQUIRED WITH ONE (1) WILL BE PROVIDED ON EACH FLOOR, BASEMENT, MAIN (1ST) FLOOR, 2ND FLOOR AND 3RD FLOOR IN A CENTRAL LOCATION.
13. THE NEW BUILDING WILL MEET ACCESSIBILITY REQUIREMENTS PER CHAPTER 11 AND ICC/ANSI A117.1-2011. BOTH NEW MAIN FLOOR BUILDING ENTRANCES ARE ACCESSIBLE. ONE PUBLIC ACCESSIBLE TOILET IS PROVIDED ON THE MAIN LEVEL FOR THE LIVE/WORK UNITS.
14. PER SECTION 1107.6 ALL UNITS WILL BE TYPE B UNITS PER SECTION 1107.6.2.2.1 = LESS THAN 20 TOTAL UNIT. THERE ARE ONLY 3 LIVE/WORK UNITS PER 1107.6.2.1 AND ONLY THE NON-RESIDENTIAL SECTION IS ACCESSIBLE. UNIT 101 IS NOT A LIVE/WORK UNIT.
15. PER SECTION 1207.2 SHALL HAVE A STC OF 50 OR GREATER BETWEEN UNITS AND PUBLIC SPACES.
16. SPECIAL INSPECTIONS ARE REQUIRED FOR THIS PROJECT. REFER TO STRUCTURAL NOTES.
17. DEFERRED SUBMITTALS:
    A. FIRE SPRINKLER DESIGN-BUILD DRAWINGS AND CALCULATIONS
    B. FIRE ALARM DESIGN-BUILD DRAWINGS
    C. CARPORT STRUCTURE DESIGN-BUILT DRAWINGS, CALCULATIONS AND UTAH SE STAMP
    1 D. CONTRACTOR SUBMITTED MECHANICAL SEISMIC BRACING DETAILS

SCHEDULE OF DRAWINGS

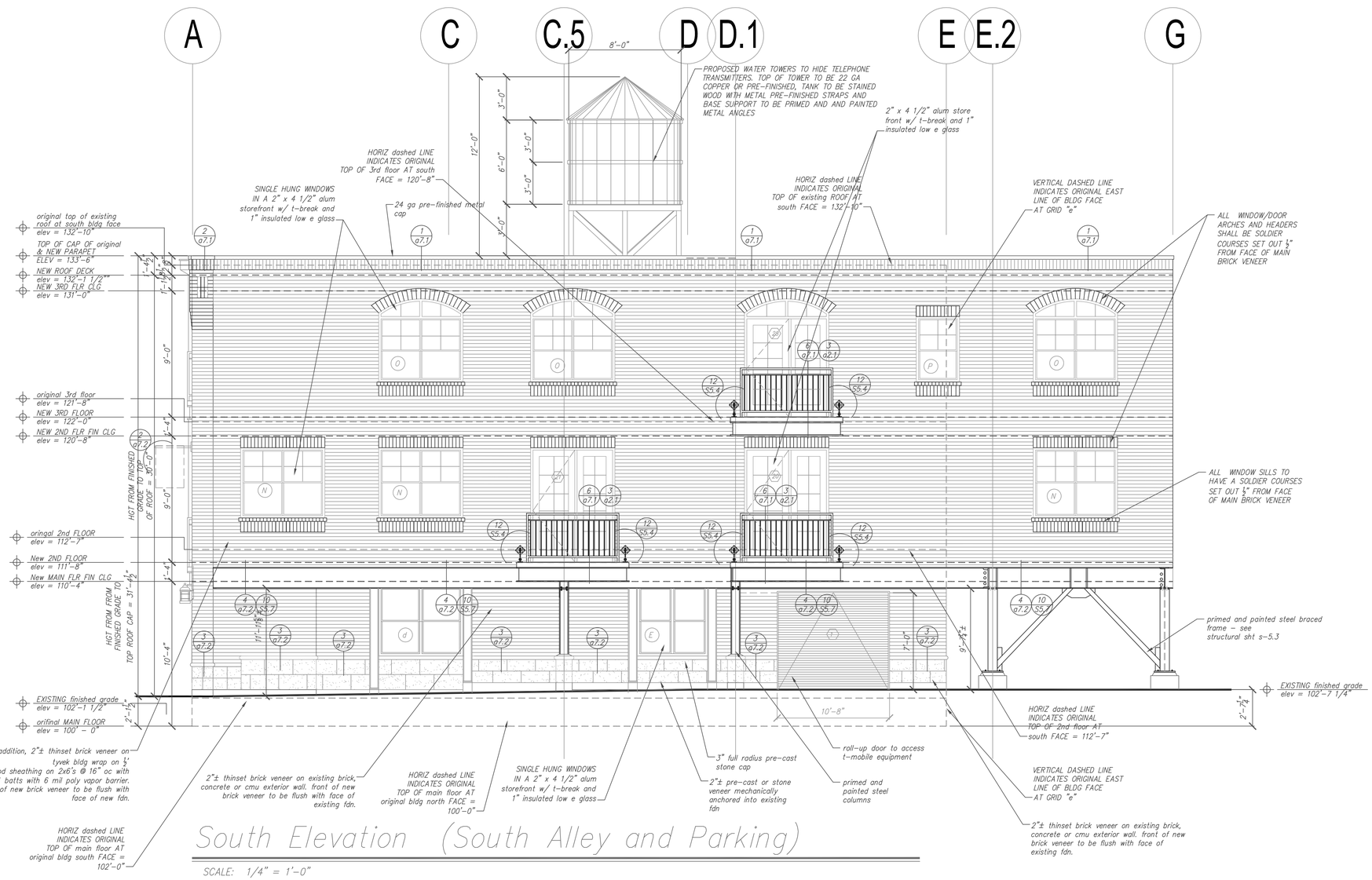

South Elevation (South Alley and Parking)

SCALE: 1/4" = 1'-0"

⚠ 04-05-17 - SLC dept Plan Reviews and owner value engineering corrections

James B. Glascock, Architect P.C.
Architecture ▪ Planning
4897 Rebecca Circle
Salt Lake City, Utah 84117
801 - 272 - 5133 e-mail: glascock@mtcon.net

STATE OF UTAH JAMES B. GLASCOCK 1036 LICENSED ARCHITECT

12/01/16

Project
15-027

remodel for:
salt lake costume building
1701 south 1100 east
salt lake city, utah

Revisions
04/05/17

Date
12/01/16

A7.4

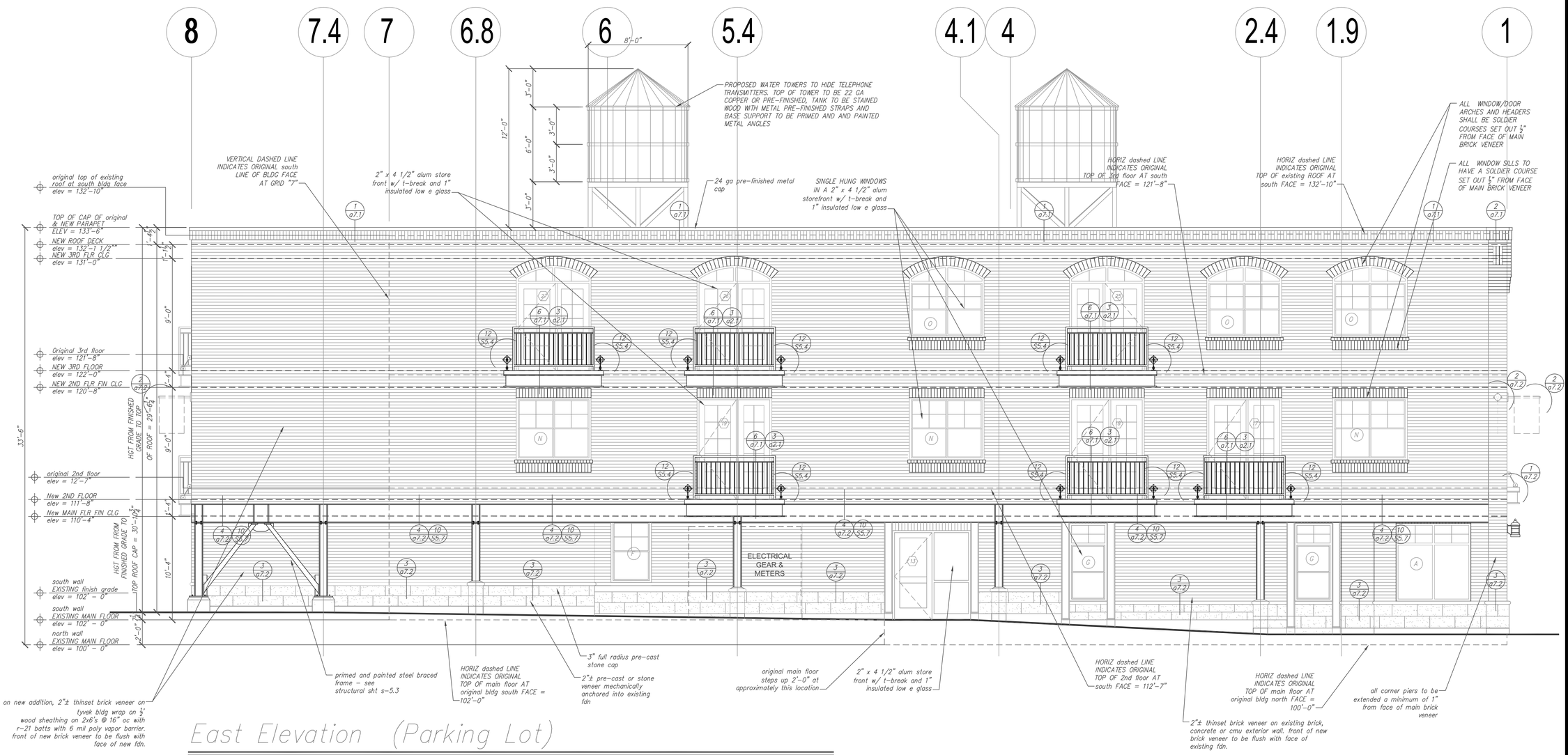

East Elevation (Parking Lot)

SCALE: 1/4" = 1'-0"

1 04-05-17 - SLC dept Plan Reviews and owner value engineering corrections

James B. Glascock, Architect P.C.
Architecture ▪ Planning
4897 Rebecca Circle
Salt Lake City, Utah 84117
801 - 272 - 5133 e-mail: glascock@mtcon.net

Project
15-027

remodel for:
salt lake costume building
1701 south 1100 east
salt lake city, utah

Revisions

Date	Revisions
12/01/16	1 04/05/17

A7.3

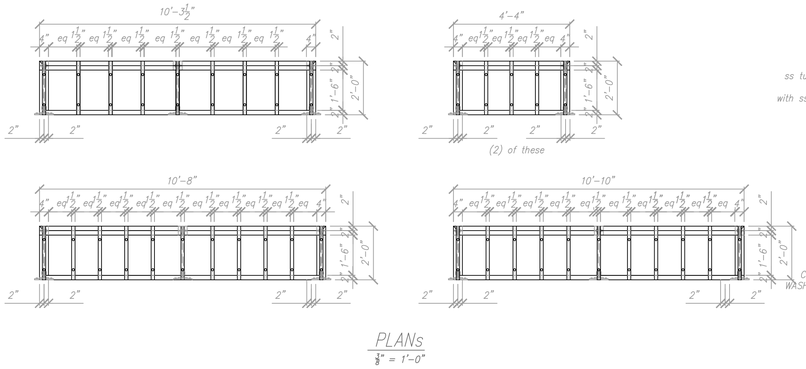

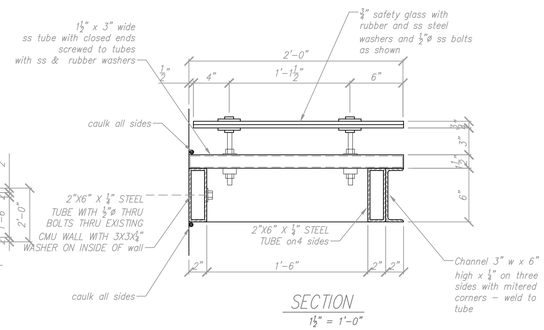

1 / a7.2 glass canopy detail
¼" = 1'-0"
(5) canopies

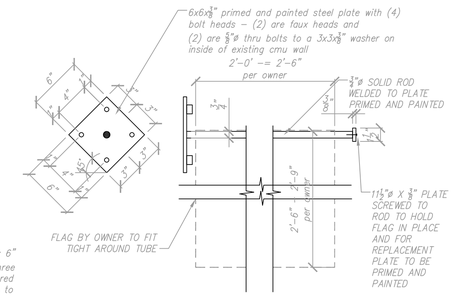

2 / a7.2 flag detail – to be by sign permit
1½" = 1'-0"
must be submitted for zoning appRoval

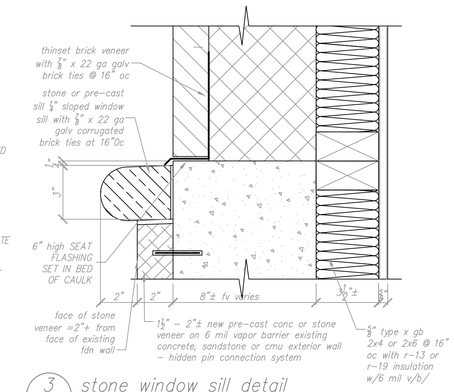

3 / a7.2 stone window sill detail
3" = 1'-0"

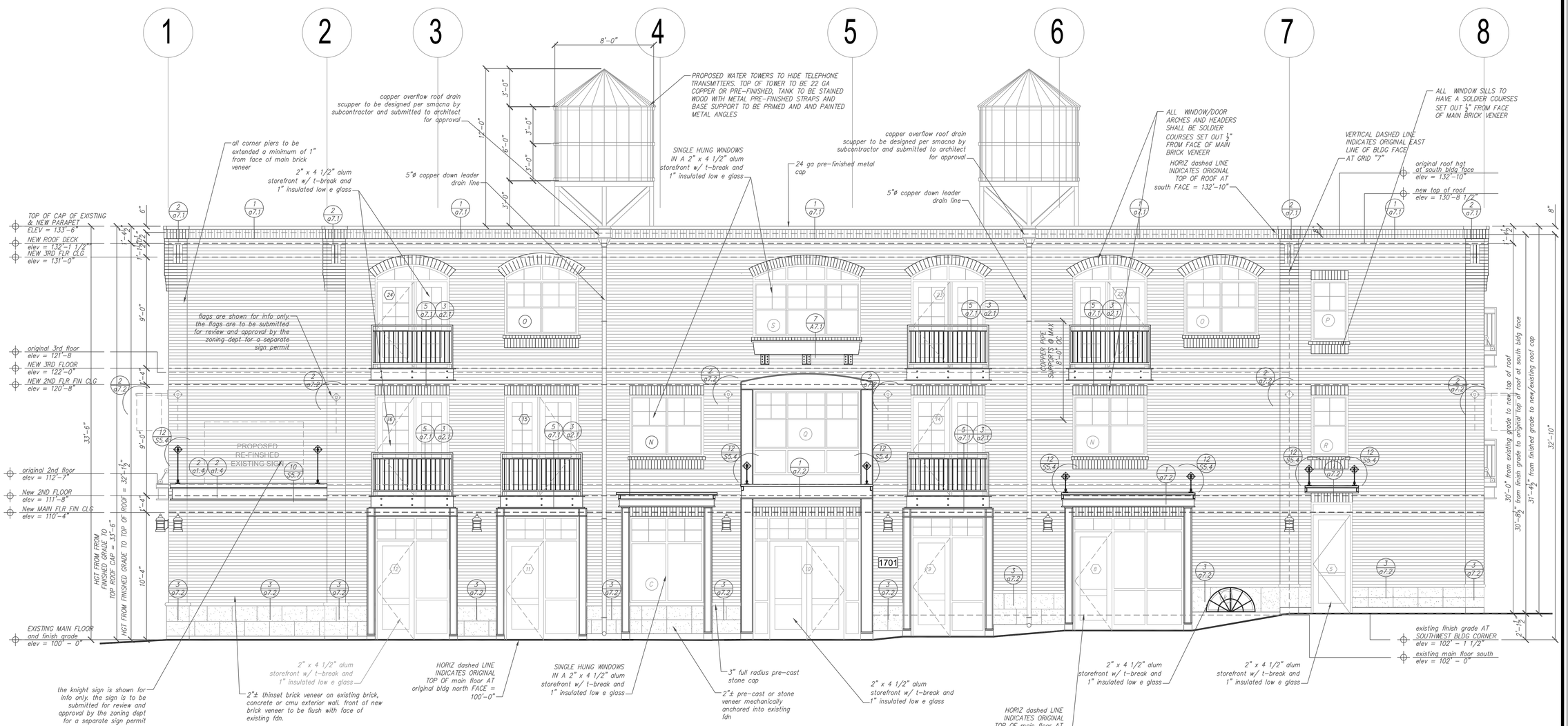

West Elevation (1100 East STREET)

SCALE: 1/4" = 1'-0"

04-05-17 – SLC dept Plan Reviews and owner value engineering corrections

James B. Glascock, Architect P.C.
Architecture ▪ Planning
4897 Rebecca Circle
Salt Lake City, Utah 84117
801 - 272 - 5133 e-mail: glascock@mtcon.net

Project
15-027
remodel for:
salt lake costume building
1701 south 1100 east
salt lake city, utah

Revisions

Date	Revisions
12/01/16	04/05/17

A7.2

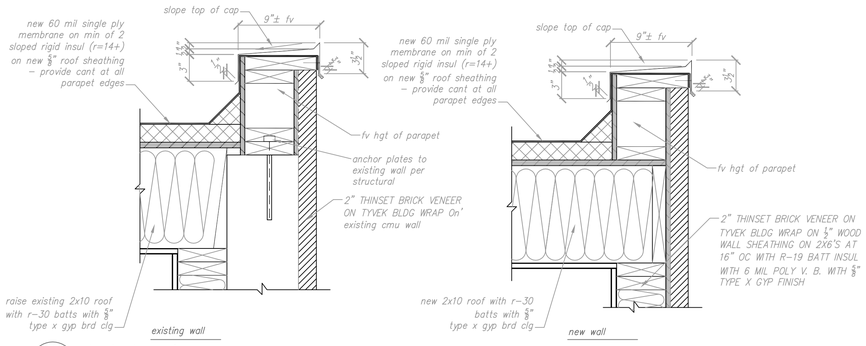

1 / a7.1 typical roof cap
1½" = 1'–0" refer to structural details – field verify all conditions with architect

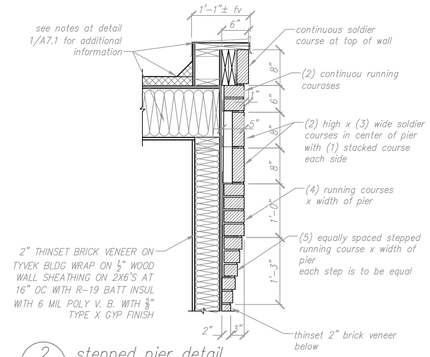

2 / a7.1 stepped pier detail
¾" = 1'–0"

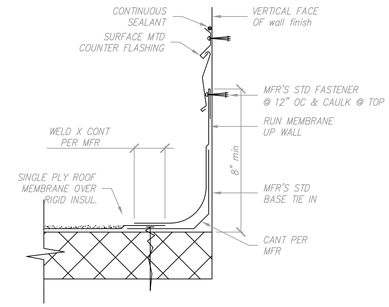

3 / a7.1 MEMBRANE ROOF @ VERTICAL WALL
3" = 1'–0"

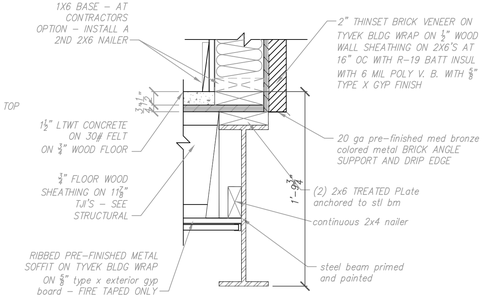

4 / a7.1 wall edge detail
1½" = 1'–0" see structural detail 10/s5.7

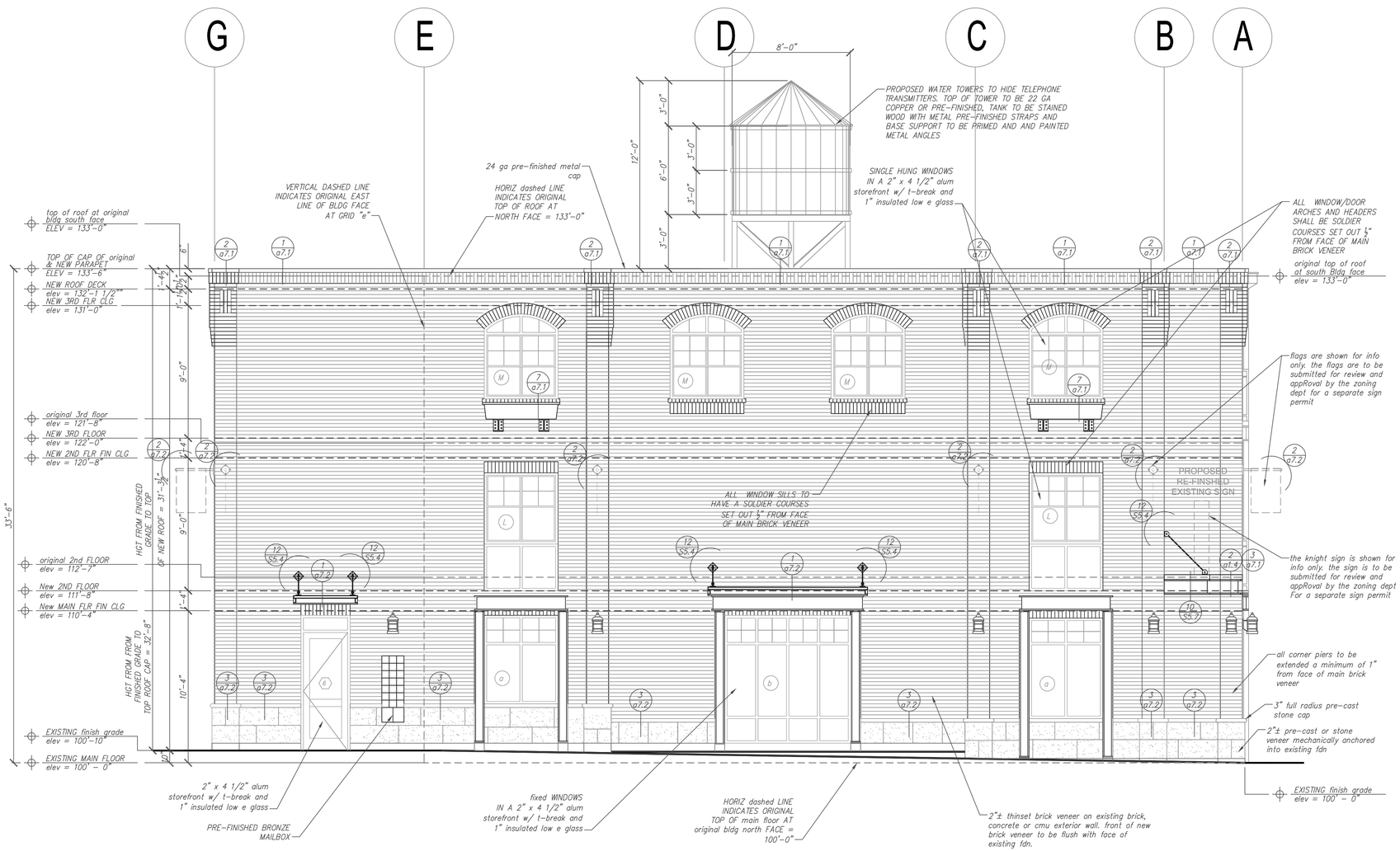

North Elevation (1700 SOUTH STREET)

SCALE: 1/4" = 1'–0"

1 04–05–17 – SLC dept Plan Reviews and owner value engineering corrections

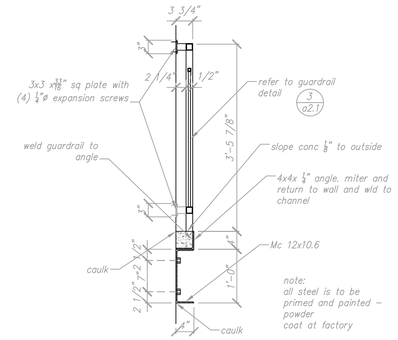

5 / a7.1 4" deep deck detail
¾" = 1'–0" this detail on 1100 east only

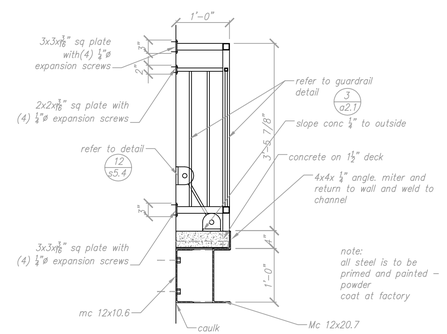

6 / a7.1 12" dEep standard deck detail
1½" = 1'–0" this detail on east and south only

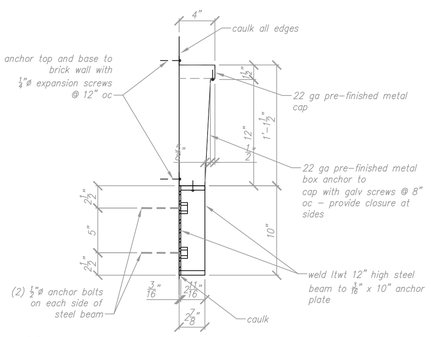

7 / a7.1 4" deep decorative planter
1½" = 1'–0"

James B. Glascock, Architect P.C.
Architecture ▪ Planning
4897 Rebecca Circle
Salt Lake City, Utah 84117
801 - 272 - 5133 e-mail: glascock@mtcon.net

STATE OF UTAH JAMES B. GLASCOCK 1030 LICENSED ARCHITECT 12/01/16

Project
15–027

remodel for:
salt lake costume building
1701 south 1100 east
salt lake city, utah

Revisions

Date	
12/01/16	1 04/05/17
	2
	3
	4

A7.1

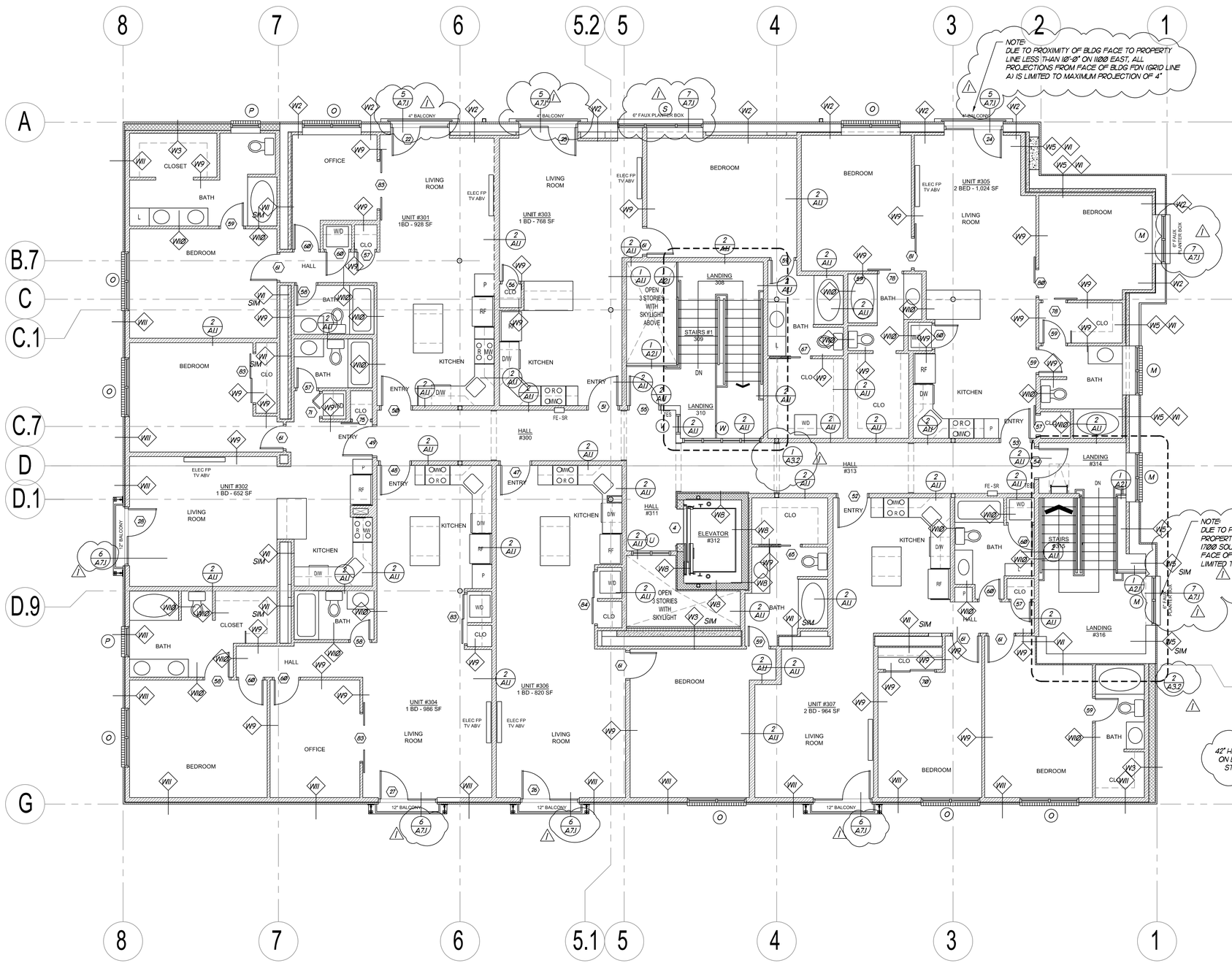

3RD FLOOR PLAN

SCALE: 3/16" = 1'-0"

NORTH

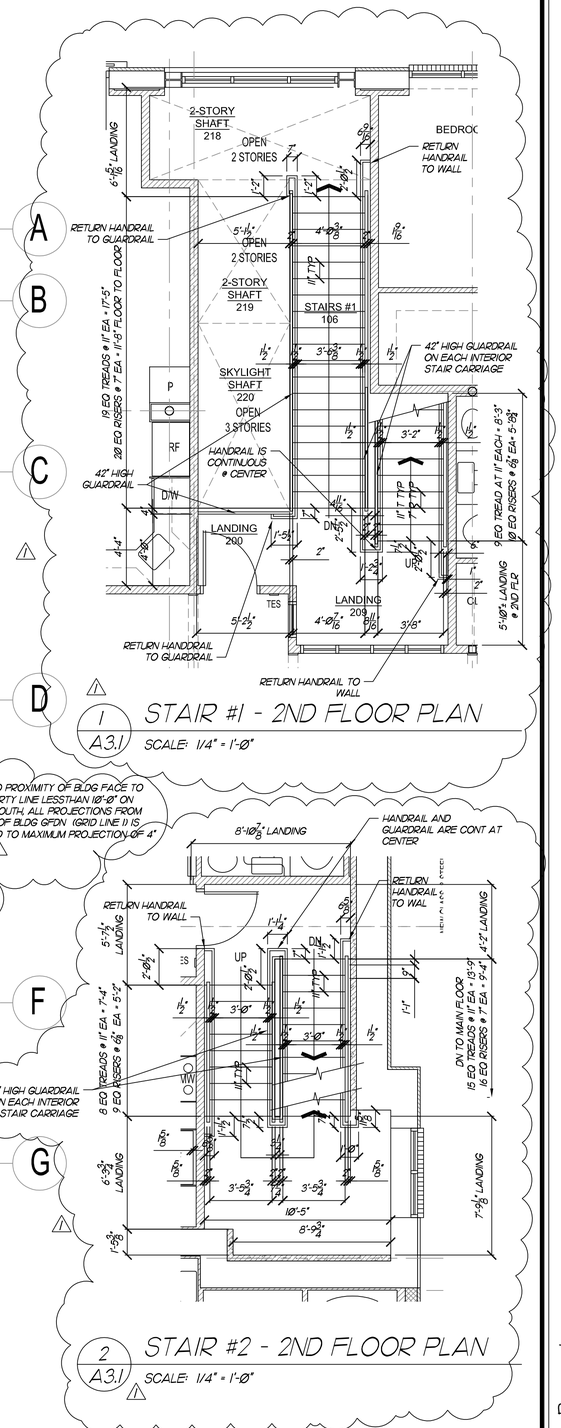

1 A3.1 STAIR #1 - 2ND FLOOR PLAN

SCALE: 1/4" = 1'-0"

2 A3.1 STAIR #2 - 2ND FLOOR PLAN

SCALE: 1/4" = 1'-0"

NOTES:
TES = TACTILE EXIT SIGN
FE SR = SEMI-RECESSED FIRE EXTINGUISHER CABINET
FACP = FIRE ALARM CONTROL PANEL
MTR OR MTRS = METER OR METERS
FDC = FIRE DEPARTMENT CONNECTION
ELEC FP = ELECTRIC FIRE PLACE
WIC = WALK IN CLOSET
CLO = CLOSET
P = PANTRY
L = LINEN CABINET
DW = DISHWASHER
W/D = STACKED WASHER & DRYER
REF OR RF = REFRIDGERATOR
MW = MICROWAVE
R = RANGE
DN = DOWN
RD = ROOF DRAIN

1 04-05-17 - SLC DEPT PLAN REVIEWS AND OWNER VALUE ENGINEERING CORRECTIONS

James B. Glascock, Architect P.C.
Architecture ▪ Planning
4897 Rebecca Circle
Salt Lake City, Utah 84117
801 - 272 - 5133 e-mail: glascock@mtcon.net

STATE OF UTAH JAMES B. GLASCOCK 5036 ARCHITECT 12-01-16

Project 15-027

REMODEL FOR:
SALT LAKE COSTUME BUILDING
1701 SOUTH 1100 EAST
SALT LAKE CITY, UTAH

Revisions
1 04-05-17

Date 12/01/16

A-3.1

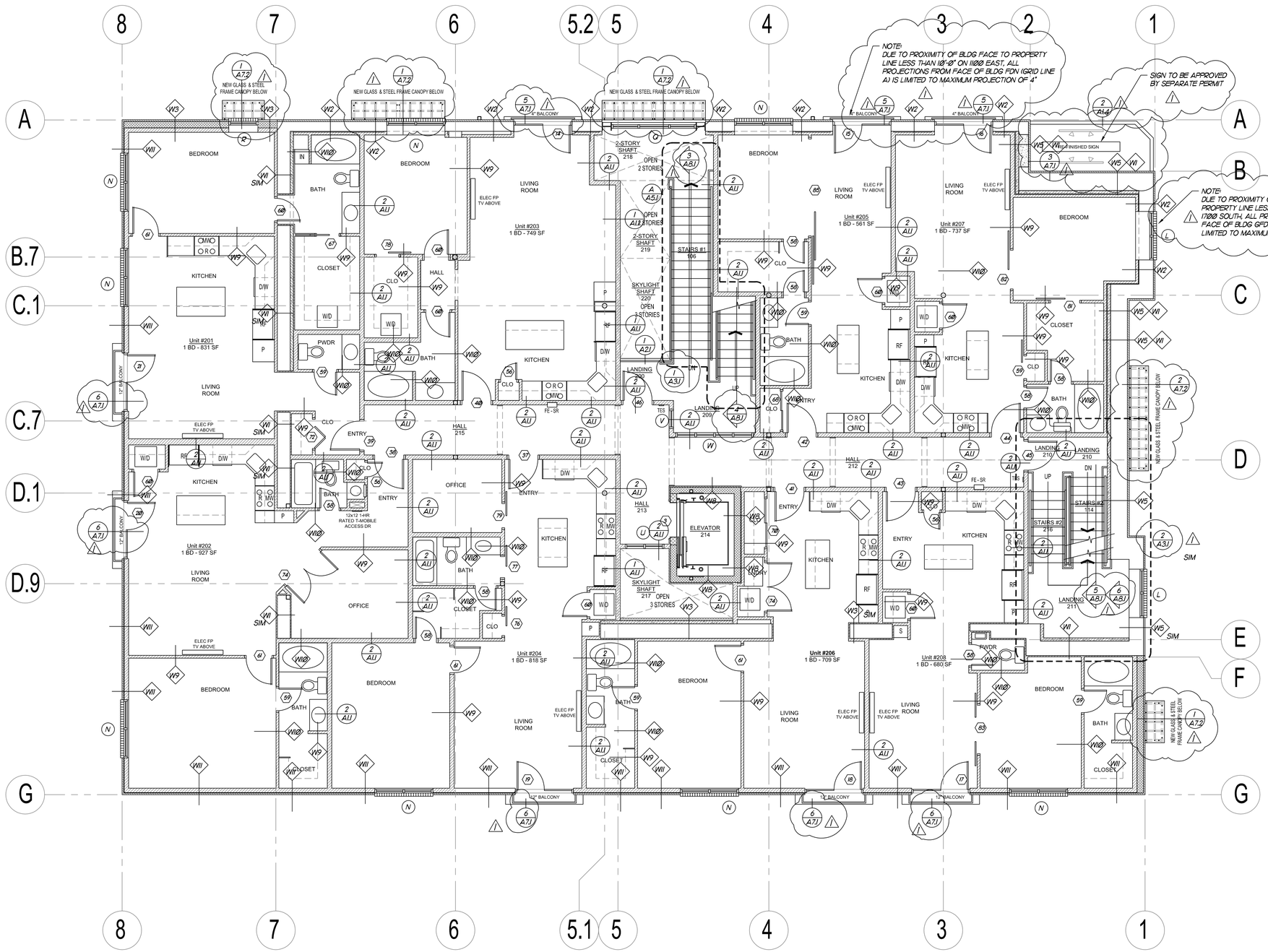

2ND FLOOR PLAN

SCALE: 3/16" = 1'-0"

NORTH

NOTES:
TES = TACTILE EXIT SIGN
FE SR = SEMI-RECESSED FIRE EXTINGUISHER CABINET
FACP = FIRE ALARM CONTROL PANEL
MTR OR MTRS = METER OR METERS
FDC = FIRE DEPARTMENT CONNECTION
ELEC FP = ELECTRIC FIRE PLACE
WIC = WALK IN CLOSET
CLO = CLOSET
P = PANTRY
L = LINEN CABINET
D/W = DISHWASHER
W/D = STACKED WASHER & DRYER
REF OR RF = REFRIDGERATOR
MW = MICROWAVE
R = RANGE
DN = DOWN
RD = ROOF DRAIN

1 Ø4-Ø5-17 - SLC DEPT PLAN REVIEWS AND OWNER VALUE ENGINEERING CORRECTIONS

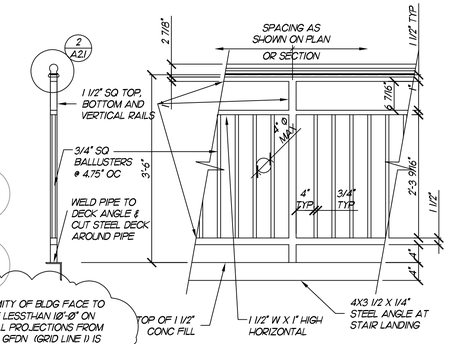

1 / A2.1 GUARD RAIL
3/4" = 1'-0"

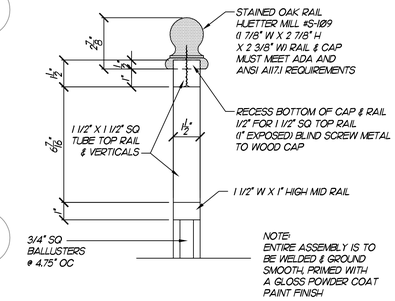

2 / A2.1 GUARDRAIL & HANDRAIL WOOD CAP
3" = 1'-0"

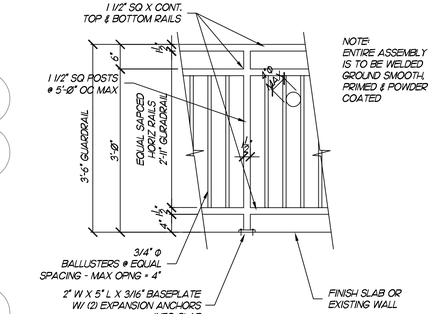

3 / A-2.1 1 1/2" SQUARE GUARDRAIL DETAIL
3/4" = 1'-0"

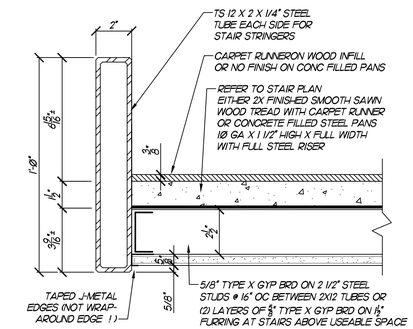

4 / A2.1 STAIR CARRIAGE SOFFIT
3" = 1'-0"

James B. Glascock, Architect P.C.
Architecture ▪ Planning
4897 Rebecca Circle
Salt Lake City, Utah 84117
801 - 272 - 5133 e-mail: glascock@mtcon.net

STATE OF UTAH JAMES B. GLASCOCK 1035 REGISTERED ARCHITECT 12/01/16

Project
15-Ø27

REMODEL FOR:
SALT LAKE COSTUME BUILDING
17Ø1 SOUTH 11Ø0 EAST
SALT LAKE CITY, UTAH

Revisions
1 12/01/16

Date
12/01/16

A-2.1

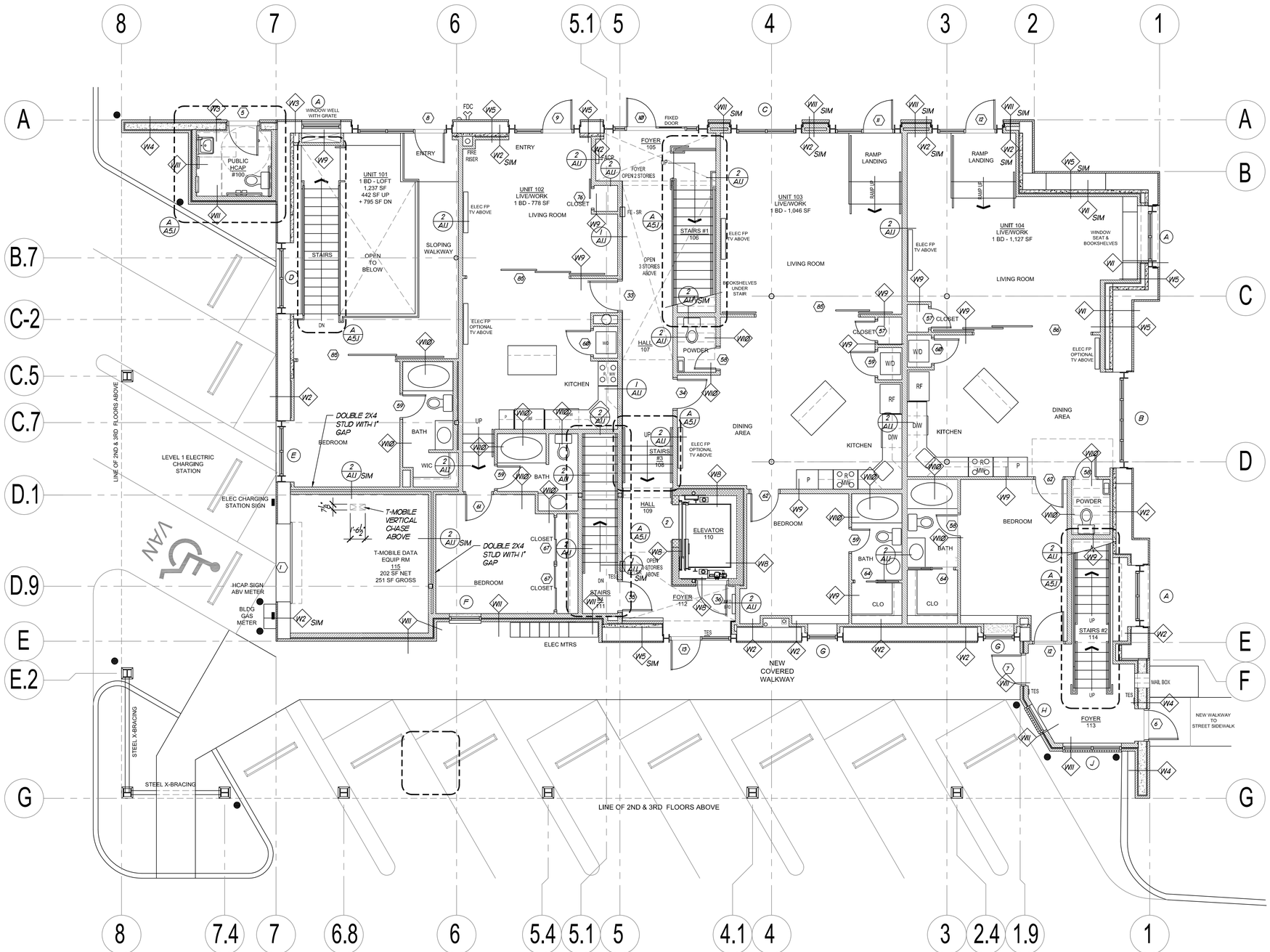

MAIN FLOOR PLAN

SCALE: 3/16" = 1'-0"

NORTH

NOTES:
TES = TACTILE EXIT SIGN
SFE = SEMI-RECESSED FIRE EXTINGUISHER CABINET
FACP = FIRE ALARM CONTROL PANEL
MTR OR MTRS = METER OR METERS
FDC = FIRE DEPARTMENT CONNECTION
ELEC FP = ELECTRIC FIRE PLACE
WIC = WALK IN CLOSET
CLO = CLOSET
P = PANTRY
L = LINEN CABINET
D/W = DISHWASHER
W/D = STACKED WASHER & DRYER
REF OR RF = REFRIDGERATOR
MW = MICROWAVE
R = RANGE
DN = DOWN
RD = ROOF DRAIN

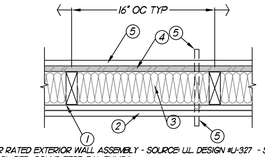

ONE-HOUR RATED EXTERIOR WALL ASSEMBLY - SOURCE: UL DESIGN #U-327 - STC SOUND RATING: MIN OF 51+ PER SOUND TEST: RAL-TLM-174

1. 2X6'S @ 16" O.C. BRACED AT MID-HEIGHT AND EFFECTIVELY FIRESTOPPED AT TOP & BOTTOM.
2. ON INTERIOR WALL SIDE, INSTALL ONE LAYER OF 5/8" THICK TYPE X GYPSUM WALLBOARD WITH PARALLEL TO RESILIENT CHANNELS 24" OC WITH 1" TYPE "S" DRYWALL SCREWS AT EDGES AND "CENTER ROW 12" OC. END JOINTS BACK-BLOCKED WITH RC-1 RESILIENT CHANNELS. RESILIENT CHANNELS ATTACHED AT RIGHT ANGLES TO WOOD STUDS @ 16" OC WITH 1 5/8" TYPE "S" DRYWALL SCREWS.
3. 3" MINERAL SOUND FIBER 2.0 OR 2.3 PCF IN STUD SPACE X FULL HEIGHT OF WALL . PRESSURE FIT IN CAVITY. SOUND TESTED WITH OPEN FACE OF 2.0 MINERAL FIBER BLANKETS TOWARDS RESILIENT CHANNEL SIDE OF WALL & ON SAME SIDE AS RC-1 CHANNEL.
4. ON OPPOSITE HALL SIDE WALL, INSTALL 1/2" WOOD SHEARWALL SHEATHING AS INDICATED ON STRUCTURAL PLANS.
5. OVER WOOD SHEATHING, INSTALL ONE LAYER OF 5/8" TYPE X GYPSUM WALLBOARD APPLIED AT RIGHT ANGLES TO STUDS WITH 1 5/8" TYPE "W" DRYWALL SCREWS 12" O.C. STAGGER VERTICA JOINT 48" OC EACH SIDE.
6. SEAL EDGE OF ALL HVAC, PLUMBING OR ELECTRICAL PENETRATIONS THROUGH WALL ASSEMBLY WITH 1-HR RATED UL TESTED AND APPROVED SEALANT. SEE SPECS

1 / A1.1 1 HR RATED WALL WITH SHEATHING

NO SCALE

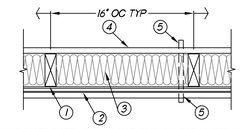

ONE-HOUR RATED EXTERIOR WALL ASSEMBLY - SOURCE: UL DESIGN #U-327 - STC SOUND RATING: MIN OF 51+ PER SOUND TEST: RAL-TLM-174

1. 2X6'S @ 16" O.C. BRACED AT MID-HEIGHT AND EFFECTIVELY FIRESTOPPED AT TOP & BOTTOM.
2. ON INTERIOR WALL SIDE, INSTALL ONE LAYER OF 5/8" THICK TYPE X GYPSUM WALLBOARD WITH PARALLEL TO RESILIENT CHANNELS 24" OC WITH 1" TYPE "S" DRYWALL SCREWS AT EDGES AND "CENTER ROW 12" OC. END JOINTS BACK-BLOCKED WITH RC-1 RESILIENT CHANNELS. RESILIENT CHANNELS ATTACHED AT RIGHT ANGLES TO WOOD STUDS @ 16" OC WITH 1 5/8" TYPE "S" DRYWALL SCREWS.
3. 3" MINERAL SOUND FIBER 2.0 OR 2.3 PCF IN STUD SPACE X FULL HEIGHT OF WALL . PRESSURE FIT IN CAVITY. SOUND TESTED WITH OPEN FACE OF 2.0 MINERAL FIBER BLANKETS TOWARDS RESILIENT CHANNEL SIDE OF WALL AND ON SAME SIDE AS RC-1 CHANNELS.
4. ON OPPOSITE WALL OF RESILIENT CHANNELS, INSTALL ONE LAYER OF 5/8" TYPE X GYPSUM WALLBOARD APPLIED AT RIGHT ANGLES TO STUDS WITH 1 1/4" TYPE "W" DRYWALL SCREWS 12" O.C. STAGGER VERTICAL JOINTS 48" OC EACH SIDE.
5. SEAL EDGE OF ALL HVAC, PLUMBING OR ELECTRICAL PENETRATIONS THROUGH WALL ASSEMBLY WITH 1-HR RATED UL TESTED AND APPROVED SEALANT. SEE SPECS

2 / A1.1 1 HR RATED INTERIOR COMMON WALL

NO SCALE

ONE HOUR RATED FLOOR ASSEMBLY - SOURCE: UL DESIGN NO. L516; AND USG FIRE-RESISTANT ASSEMBLIES HANDBOOK - STC SOUND RATING: MIN OF 59+ PER SOUND TEST: USG 74074

1. FINISH FLOOR TOPPING MIXTURE: 1 1/2" LIGHTWEIGHT CONCRETE. COMPRESSIVE STRENGTH = 3000 PSI MINIMUM.
2. FLOOR MAT MATERIAL LOOSE LAID OVER THE SUBFLOOR. EQUAL TO MAXXON CORP — TYPE ACOUSTI-MAT I, ACOUSTI-MAT II, ACOUSTI-MAT 3, ENKASONIC 9110, ACOUSTI-MAT LP-R.
3. SUBFLOORING — MIN 23/32 IN. THICK T&G WOOD STRUCTURAL PANELS, MIN GRADE "SINGLE-FLOOR". FACE GRAIN OF PLYWOOD OR STRENGTH AXIS OF PANELS TO BE PERPENDICULAR TO THE FLOOR JOISTS WITH END JOINTS STAGGERED 4 FT. PANELS SECURED TO JOISTS WITH CONSTRUCTION ADHESIVE AND NO. 6D RINGED SHANK NAILS SPACED 12 IN. OC ALONG EACH JOIST. STAPLES HAVING EQUAL OR GREATER WITHDRAWAL AND LATERAL RESISTANCE STRENGTH MAY BE SUBSTITUTED FOR THE 6D NAILS. REFER TO STRUCTURAL PLANS FOR ADDITIONAL FLOOR SHEATHING NAILING.
4. WOOD JOISTS - MIN 2 X 10 SPACED 16 IN. OC AND EFFECTIVELY FIREBLOCKED PER CODE. PROVIDE CROSS BRIDGING - MIN 1 BY 3 IN. OR MIN 2 X 10 SOLID BLOCKING. IN-LIEU-OF CROSS BRIDGING, HORIZONTAL BRIDGING IN THE SAME JOIST BAY AS CEILING DAMPER. WHEN CEILING DAMPER IS EMPLOYED. WOOD 2 X 4 SECURED BETWEEN JOISTS WITH NAILS.
5. CEILING DAMPERS - MAX NOM ARE REA SHALL BE 198 SQ IN. MAX RECTANGLAR SIZE SHALL BE 12 IN. WIDE BY 16-1/2 IN. LONG. MAX HEIGHT OF DAMPER SHALL BE 8-3/4 IN. AGGREGATE DAMPER OPENINGS SHALL NOT EXCEED 99 SQ IN. PER 100 SQ FT OF CEILING AREA. DAMPER IS TO BE INSTALLED IN ACCORDANCE WITH THE MANUFACTURERS INSTALLATION INSTRUCTIONS PROVIDED WITH THE DAMPER. A STEEL GRILLE SHALL BE INSTALLED IN ACCORDANCE WITH INSTALLATION INSTRUCTIONS.
6. SOUND BATTS AND BLANKETS - NOM 48 X 16 X 3 IN. THICKNESS OF GLASS FIBER BATTS SECURED TO JOISTS ON BOTH SIDES WITH STAPLES SPACED 12 IN. OC.
7. INSTALL RC-1 RESILIENT CHANNELS FORMED FROM NO. 25 MSG GALV STEEL AND SHAPED AS SHOWN BELOW, RC-1 TO BE SPACED 24 IN. OC PERPENDICULAR TO JOISTS. CHANNELS OVERLAPPED 1/2 IN. AT ENDS AND SECURED TO EACH JOIST WITH ONE NO. 8 IN. LONG NO. 7 TYPE S BUGLE HEAD SCREW. ADDITIONAL RESILIENT CHANNELS POSITIONED SO AS TO COINCIDE WITH END JOINTS OF GYPSUM BOARD. ADDITIONAL CHANNELS SHALL EXTEND MIN 3 IN. BEYOND EACH SIDE EDGE OF BRD.
8. TWO LAYERS OF NOM 5/8 IN. THICK, 4 FT WIDE GYPSUM BOARD, INSTALLED WITH LONG DIMENSION PERPENDICULAR TO JOISTS ON TOP OF THE FLOOR MAT MATERIAL. GYPSUM BOARD SECURED TO EACH OTHER WITH 1 IN. LONG NO. 6 TYPE G BUGLE HEAD STEEL SCREWS SPACED 12 IN. OC AND LOCATED A MIN OF 1-1/2 IN. FROM SIDE AND END JOINTS. THE JOINTS OF THE GYPSUM BOARD ARE TO BE STAGGERED A MINIMUM OF 12 INCHES IN BETWEEN LAYERS AND FROM THE JOINTS OF THE SUBFLOOR.
9. SEAL ALL EDGES OF AN HVAC, PLUMBING, ELECTRICAL PENETRATIONS THROUGH THIS ASSEMBLY WITH 1 HOUR RATED, UL TESTED AND APPROVED SEALANT. REFER TO SPECIFICATIONS.
10. BASE LAYER JOINTS DO NOT NEED TO BE FINISHED BUT FIRE-TAPED ONLY. SECOND LAYER OF GYPSUM BOARD TO HAVE PAPER TAPE EMBEDDED IN CEMETITIOUS COMPOUND OVER JOINTS & EXPOSED SCREW HEADS COVERED WITH COMPOUND WITH EDGES OF COMPOUND TEXTURED & SANDED OUT.

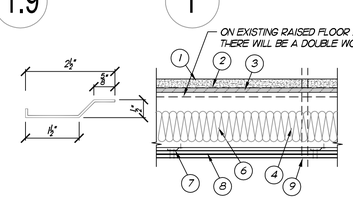

3 / A1.1 1 HR RATED FLOOR ASSEMBLY

1" = 1'-0"

James B. Glascock, Architect P.C.
Architecture ▪ Planning
4897 Rebecca Circle
Salt Lake City, Utah 84117
801 - 272 - 5133 e-mail: glascock@mtcon.net

Project: 15-027

REMODEL FOR:
SALT LAKE COSTUME BUILDING
1701 SOUTH 1100 EAST
SALT LAKE CITY, UTAH

Revisions

Date	Revisions
12/01/16	

A-1.1

Landscape Architect

rdl Design Company, Inc.
10120 East Tale Avenue
Salt Lake City, Utah 84105

Phone : 801-647-3114
Email : rdldesign@comcast.net

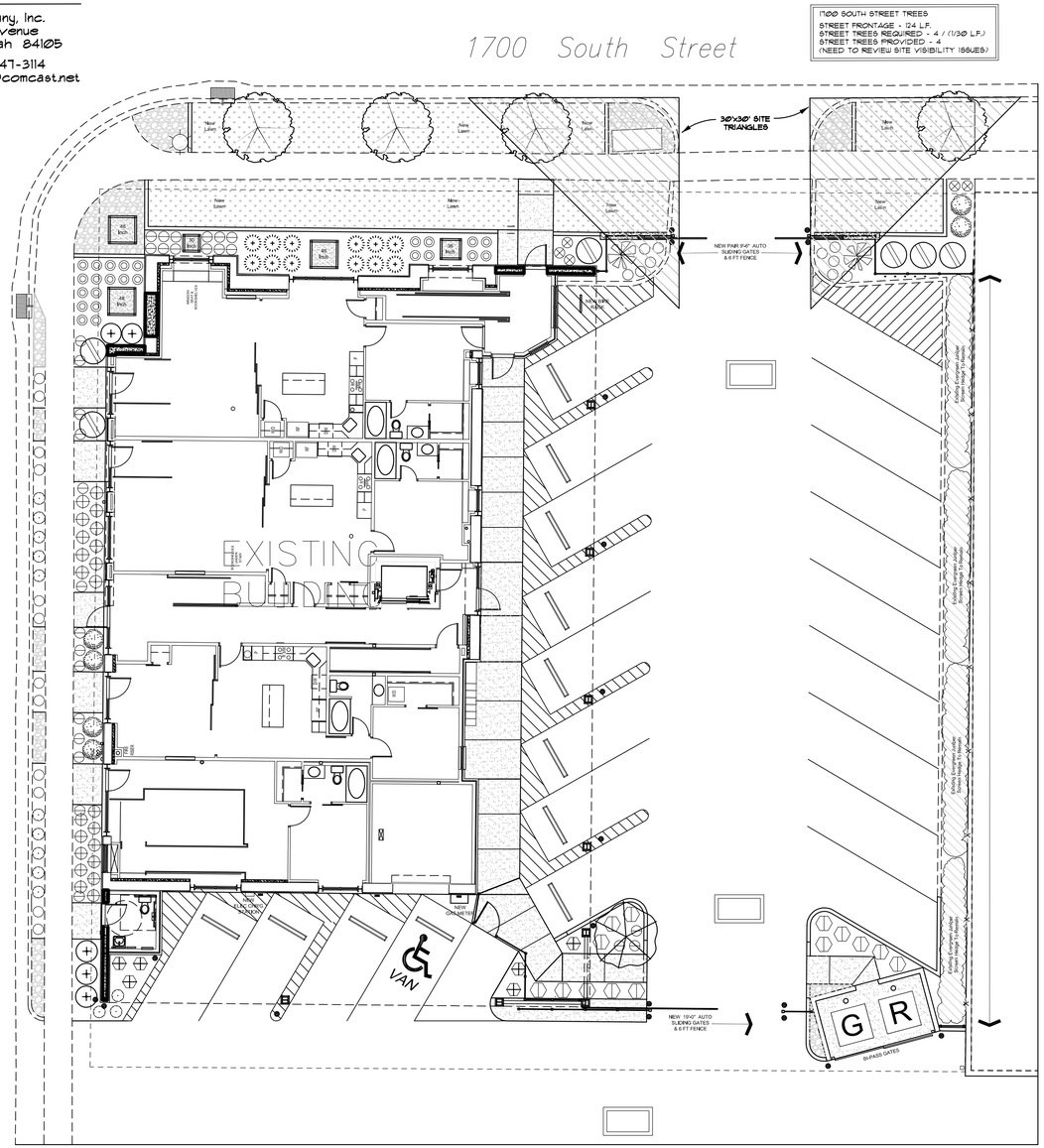

Legend

Symbol	Description	Remarks
	Paver Pad Base For Individual Planter Pots	Material To Be "Belgard" Urbana Modular Paver / (3) 48" Pads, (1) 36" Pad, (1) 30" Pad / Toscana Color
	Concrete Mowstrip 6"x6" Poured In Place	Install In Straight Lines & Flush To Curbs & Walks. Compact Sub-Grade To Minimum 95%.
	New Sodded Lawn / Drought Tolerant Mix	Install In All Areas Shown Over Specified 4 inch Depth Of Import Topsoil.
	Decorative Stone / 1 1/2" Min. Size / Washed	Install To 4" Depth / Material Is CALICO And Available Through Several Local Sources.
No Match	Bark Mulch / Shredded & Colored / Dark Brown	Install To 4" Depth / Material Is Tinted Bark And Available Through Local Nurseries.

Landscape Area Calculations

TOTAL SITE AREA	15,562 S.F.	(100%)
TOTAL LANDSCAPE AREA REQUIRED	3,112 S.F.	(20%)
TOTAL LANDSCAPE AREA PROVIDED	3,281 S.F.	(21%)
TOTAL LAWN AREA (ON-SITE)	480 S.F.	(14.6%)
TOTAL PLANTING AREA (ON-SITE)	1,440 S.F.	(43.9%)
TOTAL LAWN AREA (OFF-SITE)	670 S.F.	(20.4%)
TOTAL PLANTING AREA (OFF-SITE)	691 S.F.	(21.1%)

Drought Tolerant Plant Calculations

TREE PLANTINGS PROVIDED	5 EA.	(100%)
DROUGHT TOLERANT PLANTS REQUIRED	4 EA.	(90%)
DROUGHT TOLERANT PLANTS PROVIDED	5 EA.	(100%)
SHRUB PLANTINGS PROVIDED	25 EA.	(100%)
DROUGHT TOLERANT PLANTS REQUIRED	23 EA.	(90%)
DROUGHT TOLERANT PLANTS PROVIDED	25 EA.	(100%)
PERENNIALS / GRASSES PLANTINGS PROVIDED	144 EA.	(100%)
DROUGHT TOLERANT PLANTS REQUIRED	118 EA.	(90%)
DROUGHT TOLERANT PLANTS PROVIDED	144 EA.	(100%)

Landscape Plan

SCALE: 1" = 10'-0"

NORTH

Plant List (TREES)

Quan.	Symbol	Botanical Name	Common Name	Size	Remarks	Hydrozone
1		** Amelanchier gr. 'Autumn Brilliance'	Autumn Brill. Serviceberry	2" Caliper 8'-10' Height	Full Heads Matching	TD-4 Deciduous Tree
4		** Zelcova serrata 'Musashino'	Musashino Columnar Zelcova	2" Caliper 10'-12' Height	Full Heads Matching	TD-4 Deciduous Tree

Plant List (SHRUBS)

Quan.	Symbol	Botanical Name	Common Name	Size	Remarks	Hydrozone
12		** Buxus microphylla 'Julia Jane'	Julia Jane Boxwood	5 Gallon	18" - 24" Ht.	TW-2
2		** Rhus typhina 'Bailtiger'	Tiger Eye's Sumac	5 Gallon	24" - 30" Ht.	TW-2
6		** Rosa sp. 'Knock Out Red'	Red Knock Out Rose	5 Gallon	18" - 24" Ht.	TW-2
5		** Spiraea japonica 'Walbuma'	Magic Carpet Spiraea	5 Gallon	18" - 24" Ht.	TW-2

Plant List (ORNAMENTAL GRASSES/PERENNIALS)

Quan.	Symbol	Botanical Name	Common Name	Size	Remarks	Hydrozone
6		** Calamagrostis a. 'Avalanche'	Avalanche Feather Grass	5 Gallon	24" - 30" Ht.	TW-2
14		** Calamagrostis a. 'Karl Foerster'	Karl Foerster Feather Grass	5 Gallon	24" - 30" Ht.	TW-2
22		** Hemerocallis Stella d'Oro	Stella d'Oro Day Lily	1 Gallon	9" - 12" Ht.	TW-2
5		** Lavandula 'Munstead'	Munstead Lavender	1 Gallon	9" - 12" Ht.	TW-2
6		** Panicum virgatum 'Shenandoah'	Shenandoah Switch Grass	5 Gallon	18" - 24" Ht.	TW-2
22		** Pennisetum apol. 'Hamelin'	Hamelin Dwarf Fountain Grass	1 Gallon	12" - 15" Ht.	TW-2
24		** Pennisetum apol. 'Little Bunny'	Little Bunny Fountain Grass	1 Gallon	12" - 15" Ht.	TW-2
16		** Sesleria autumnalis	Autumn Moor Grass	1 Gallon	9" - 12" Ht.	TW-2
29		** Sedum rupestre 'Angelina'	Angelina Sedum	1 Gallon	Full Can	TW-2

** INDICATES PLANT MATERIAL SPECIES IS INCLUDED IN THE "SALT LAKE CITY PLANT LIST & HYDROZONE SCHEDULE 2013". Plant quantities are provided for convenience ONLY!! The contractor shall provide and install all plants either shown or noted on the plans.

Plant Material Quality Note:

All plant materials shall be of number one quality and size for the container specified. All materials of each variety shall be furnished by the same supplier and come from the same stock or group. The Owner and Landscape Architect have the right to reject any and all plant materials not meeting specification or in a healthy condition for the project. The contractor shall secure all plant materials for the project a minimum of 60 days prior to the anticipated installation date. No plant substitutions will be considered following this 60 day period. All plant materials shall be reviewed and approved prior to shipment to the site.

Planting Notes

1. All shrub planting areas shall receive a 12 inch depth of topsoil, all lawn areas a 4 inch depth of topsoil. Topsoil is not available at the site and must be imported from an approved local source. All topsoil shall be of a sandy loam consistency. The contractor shall supply a sample and chemical analysis of the proposed topsoil from a reputable topsoil company. The chemical analysis shall be of an acceptable range as compared to the sample analysis prepared by BYU soil testing laboratory, which is available from the testing facility.
2. Prior to placement of topsoil, all subgrade areas shall be loosened by scarifying the soil to a 6 inch depth, by the use of mechanical means, in order to create a transition layer between soils.
3. All plant material holes shall be dug twice the diameter of the rootball and 6 inches deeper. Excavated material shall be removed from the site, or used in site backfill prior to topsoil placement.
4. Plant backfill mixture shall be composed of 3 parts topsoil to 1 part humus additive, and shall be rotary mixed on-site prior to installation. A pre-mixed soil medium can be used as an alternative.
5. Plant fertilizer shall be 'Agriform' brand 21 gram tablets used as per recommendations.
6. Upon completion of planting operations, all shrub pits and tree wells shall receive a 4 inch depth of fine ground bark mulch cover. The actual bed areas shall receive a 3 inch depth of shredded - tinted (dark brown) bark mulch, which is available through several local suppliers. Pre-emergent herbicide shall be applied to all areas, one application on topsoil prior to bark mulch installation, the other on top of bark mulch following installation. Rock areas shall receive "Dalhitt" Pro-5 weed barrier fabric beneath decorative rock, secured to the ground per manufacturer's recommendations, with pre-emergent applications as previously mentioned.
7. All lawn areas shall be installed using a water conservative mixture, and shall be composed of multiple drought tolerant Bluegrass varieties. Provide cutsheet of exact product.
8. Landscape maintenance shall be required for a period through the second mowing of the lawn (30 days min.) and shall include mowing, weeding, pruning and one fertilization.
9. The project shall be swept clean of dirt and debris prior to completion of the project, and on a daily basis, if required, as determined by the Owner/contractor.
10. The contractor shall comply with all warranties and guarantees set forth by the Owner, and in no case shall that period be less than one year following the date of completion and acceptance.

Planting General Notes

1. All bidding landscape contractors shall have a minimum of 5 years experience in the installation of commercial landscape and irrigation projects, and be able to supply the necessary staff to perform all tasks associated with these drawings, and in a professional and timely manner.
2. The landscape contractor, at all times, shall have personnel on-site experienced in being able to interpret the drawings correctly, and accurately measure the design layout using the specified scale.
3. The contractor shall verify the exact location of all existing and proposed utilities, and all site conditions prior to beginning work. The contractor shall coordinate their work with the project manager and all other contractors working on the site.
4. The finish grade of all planting areas shall be smooth, even and consistent, free of any humps, depressions or other grading irregularities. The finish grade of all landscape areas shall be graded consistently 1/2" below all walks, curbs, etc.
5. The contractor shall provide all materials, labor and equipment required for the proper completion of all landscape work as specified and shown on the drawings.
6. All plant materials shall be approved prior to planting. The Owner/Landscape Architect has the right to reject any and all plant material not conforming to the specifications.
7. The contractor shall plant all plants per the planting details, stake/guy as shown. The top of the rootballs shall be planted flush with the finish grade.

Submittal Requirements

1. The contractor shall provide to the Owner/Engineer product samples of all landscape materials such as boulders, decorative stone, bark mulches, weed barrier fabric, soil ammendments & import topsoil in order to obtain approval to be used on the project, and prior to any shipment to the site. Failure to provide this in a timely manner will in no way affect the construction schedule and time for project completion.
2. All plant materials shall be secured for the project a minimum of 60 days prior to shipment to the site. The contractor shall provide to the Owner/Engineer written confirmation of this a minimum of 30 days prior to planting of

Sub-Grade Requirements

1. LAWN AREAS : Six (6) inches below finish grade. This will allow for the installation of a six inch depth of topsoil along with the sodding material, leaving the top of sodding 1 inch below finish grade of adjacent concrete and hardscape areas.
2. SHRUB AREAS : Sixteen (16) inches below finish grade. This will allow for the installation of a twelve inch depth of topsoil along with a four inch minimum depth of decorative rock mulch and weed barrier fabric, leaving it 1 inch below finish grade of adjacent concrete and hardscape areas.
3. ROCK "ONLY" AREAS : Five (5) inches below finish grade. This will allow for the installation of a four inch depth of decorative rock mulch and weed barrier fabric, leaving it 1 inch below finish grade of adjacent concrete and hardscape areas.
4. COORDINATION : The Landscape Contractor shall meet early on in the construction process with the earthwork/grading contractor to discuss and ensure that all sub-grade elevations, per these requirements, are established and provided.

James B. Glascock, Architect P.C.
Architecture ▪ Planning
4897 Rebecca Circle
Salt Lake City, Utah 84117
801 - 272 - 5133 e-mail: glascock@mtcon.net

STATE OF UTAH LICENSED LANDSCAPE ARCHITECT ROBERTO GARCIA 11-03-2016

Project
15-027

remodel for:
salt lake costume building
1701 south 1100 east
salt lake city, utah

Revisions

Date	Revisions
11/03/16	

L 1.1

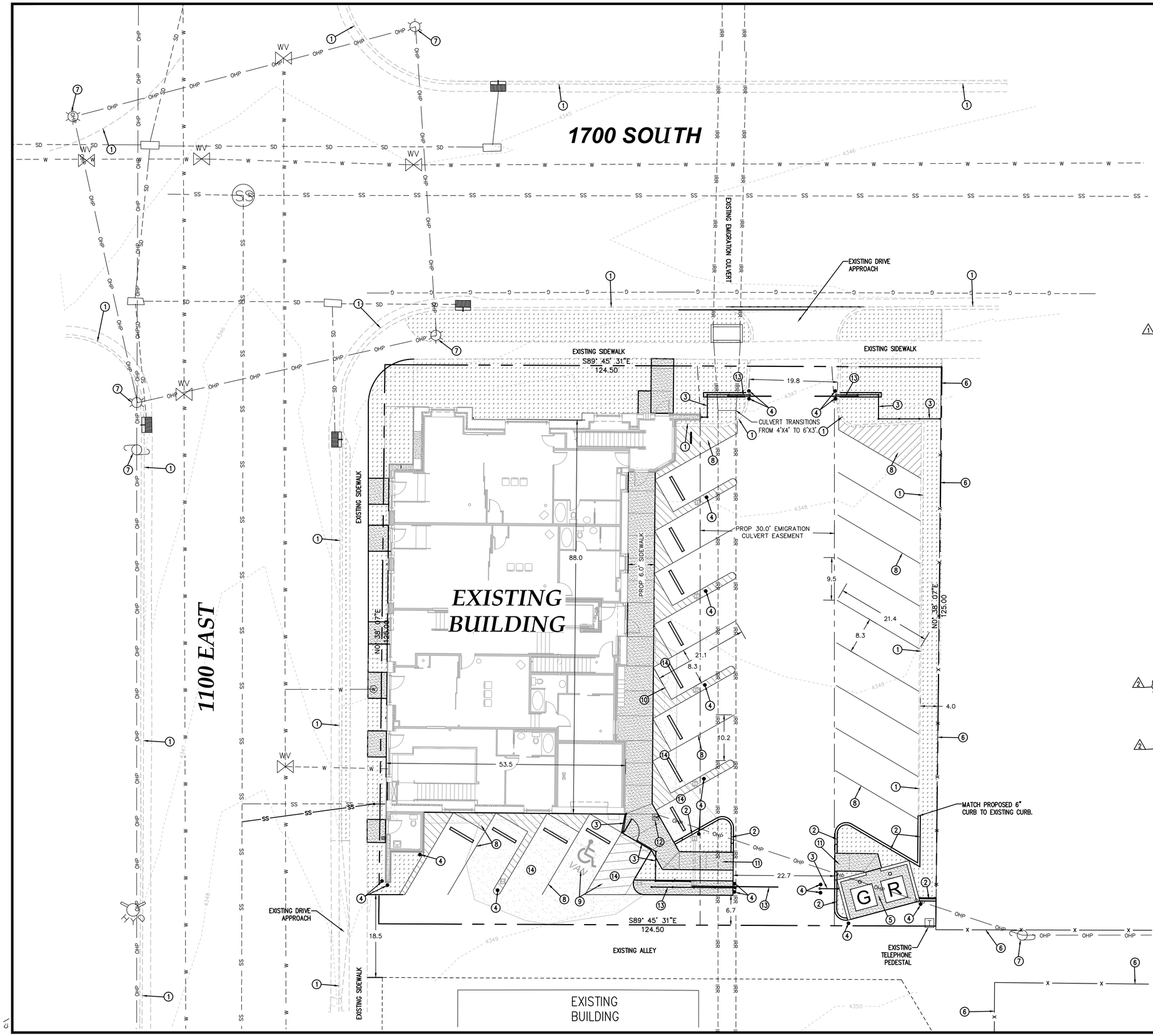

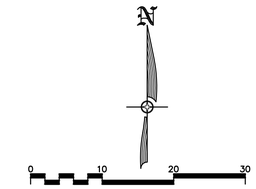

SEE COVER SHEET FOR PROJECT LEGEND

SITE PLAN NOTES:

1. EXISTING CURB & GUTTER
2. PROPOSED 6" CURB. SEE DETAIL 2/C4.
3. PROPOSED FENCE. SEE ARCHITECTURAL DRAWINGS FOR DETAILS.
4. PROPOSED BOLLARD. SEE ARCHITECTURAL DRAWINGS FOR DETAILS.
5. PROPOSED TRASH ENCLOSURE. SEE ARCHITECTURAL DRAWINGS FOR DETAILS.
6. EXISTING FENCE.
7. EXISTING POWER POLE.
8. PROPOSED PARKING LOT STRIPING TO BE DONE AFTER ASPHALT OVERLAY.
9. PROPOSED HANDICAP STALLS SHALL HAVE SLOPES OF LESS THAN 2% IN ALL DIRECTIONS.
10. EXISTING GAS METER AND LINE TO BE RELOCATED.
11. PROPOSED CURB OPENING SIDEWALK. SEE DETAIL 4/C4. DETECTIBLE WARNING OF SCORED CONCRETE OR TRUNCATED DOME TO BE PROVIDED PER CITY FIELD INSPECTOR DIRECTION. (1)
12. EXISTING ELECTRIC METER TO BE RELOCATED.
13. PROPOSED GATE. SEE ARCHITECTURAL DRAWINGS FOR DETAILS.
14. PROPOSED ASPHALT PAVEMENT TO MATCH EXISTING ASPHALT PAVEMENT SECTION.

(2) ELECTRIC GATES NOTE:
UPON COMPLETION THE SECURITY CODE FOR THE ELECTRONIC GATES TO BE PROVIDED TO SALT LAKE CITY PUBLIC UTILITIES.

(2) ALL WORK DONE WITHIN THE PUBLIC WAY SHALL BE DONE BY A LICENSED, BONDED AND INSURED CONTRACTOR WHO SHALL FIRST OBTAIN A PUBLIC WAY PERMIT. A TRAFFIC CONTROL PERMIT MAY ALSO BE REQUIRED, CONTRACTOR IS RESPONSIBLE FOR OBTAINING ALL PERMITS.

NO.	REVISIONS	BY	DATE
1	COMMENTS	SDT	03/30/17
2	COMMENTS	SDT	04/25/17

DESIGNER: SDT PROJECT ENGINEER: SDT

CIR ENGINEERING, L.L.C.
3032 SOUTH 1030 WEST, SUITE 202
SLC, Utah 84119 - 801-949-6296

SALT LAKE COSTUME
1701 SOUTH 1100 EAST, SLC, UTAH

SITE PLAN

PROFESSIONAL ENGINEER SCOTT D. THORSEN No. 354291 STATE OF UTAH

CALL BEFORE YOU DIG! BLUE STAKES 1 800 662 4111

SHEET NO. C1

PROJECT ID	DATE:
H1003-01	11/04/16
FILE NAME: PRJ-SHC	SCALE: 1"=10'

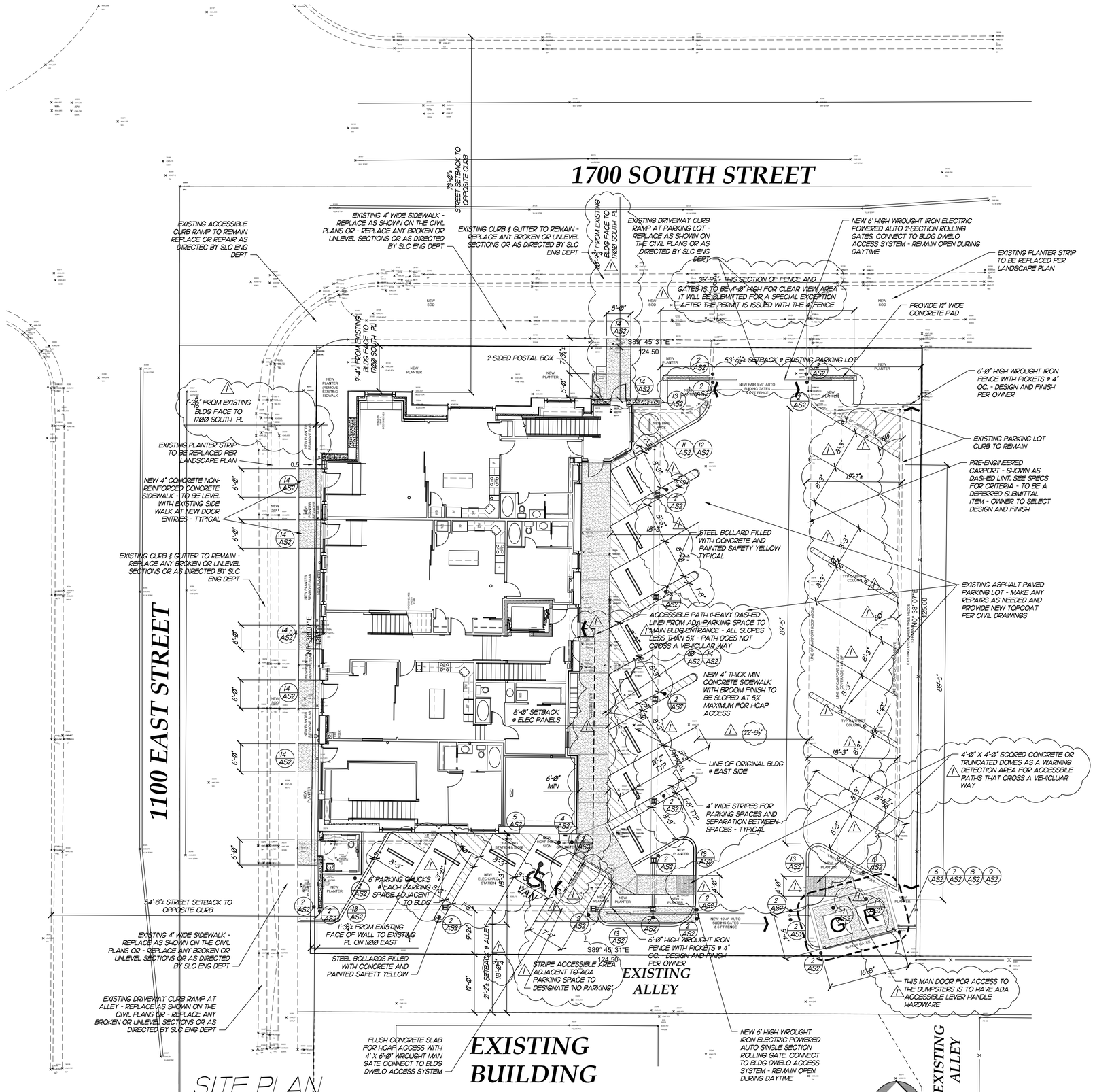

SITE PLAN

SCALE: 1/10" = 1'-0"

BUILDING SF SUMMARY

EXISTING BLDG	
BASEMENT (½ APT UNIT 1100)	
BASEMENT PART OF UNIT #1100 LOFT	724 GROSS SF
STORAGE AND MECHANICAL	1,160 GROSS SF
TOTAL BASEMENT	1,884 GROSS SF
MAIN FLOOR (3½ APT - 1 BEDROOM UNITS)	4,824 GROSS SF (BLDG FOOTPRINT)
2ND FLOOR (8 - 1 BDRM APARTMENT UNITS)	7,230 GROSS SF
3RD FLOOR (5 - 1 BDRM APARTMENT UNITS)	
(2 - 2 BDRM APRATMENT UNIT	
TOTAL 3RD FLOOR	7,230 GROSS SF
TOTAL BLDG GROSS SF	26,397 GROSS SF
TOTAL BLDG NET USEABLE (APARTMENT) SF	16,270 GROSS SF
	19 APARTMENTS
ORIGINAL BLDG SF BEFORE PARTIAL DEMOLITION	
PARTIAL BASEMENT	2,122 GROSS SF
MAIN FLOOR + MEZZANINE	4,968 GROSS SF
2ND FLOOR	4,968 GROSS SF
3RD FLOOR	4,968 GROSS SF
TOTAL ORIGINAL BLDG	17,006 GROSS SF
% OF ORIGINAL BLDG SF TO NEW BLDG SF	60%
ORIGINAL PERIMETER LF	309.71 LF
ORIGINAL PERIMETER LF MAINTAINED	268.19 LF
% OF REMAINING LF TO ORIGINAL BLDG LF	84%

SITE SUMMARY

SITE INFORMATION		
ADDRESS	1701 SOUTH 1100 EAST	
PARCEL #	16-17-259-020-0000	
EXISTING ZONING	R3	
SITE USAGE BREAKDOWN		
BUILDING MAIN FOOTPRINT (INCLUDES 2ND & 3RD FLOORS ABOVE	7,230 SF	46.5%
CARPORT STRUCTURAL COVERAGE FOOTPRINT	490 SF	3.1%
TOTAL ACTUAL BUILDING FOOTPRINT COVERAGE	7,720 SF	49.6%
ALLOWABLE - 50% - PROJECT MEETS CODE		
LANDSCAPING	1,920 SF	12.3%
SEE LANDSCAPE PLAN L-1.1 FOR SF BREAKDOWN FOR 20% ONSITE & OFF SITE LANDSCAPING		
PAVEMENT/SLABS/WALKS	5,922 SF	38.1%
TOTAL SITE (0.36 AC)	15,562 SF	100.0%

SITE PARKING SUMMARY

EXISTING BUILDING	
MAIN APARTMENTS + BASEMENT LOFT SPACE CONSIDERED WORK/LIVE UNITS	4 APARTMENTS (ALL 1 BEDROOM)
2ND FLOOR APARTMENTS	6 APARTMENTS (ALL 1-BEDROOM)
3RD FLOOR APARTMENTS	8 APARTMENTS (2 - 2 BEDROOM + 6 1-BEDROOM)
TOTAL BUILDING REQUIRED PARKING	4 (1) BEDRMS LIVE /WORK = 4 SPACES 12 (1) BEDROOMS = 12 SPACES 4 (2) BEDROOMS = 4 SPACES
TOTAL REQUIRED	20 SPACES REQUIRED
TOTAL SPACES PROVIDED	21 SPACES PROVIDED
ACCESSIBLE SPACES REQUIRED:	
CHAPTER 21A.44.020.D = 11-25 SPACES	1 ACCESSIBLE SPACE REQUIRED
ACCESSIBLE SPACES PROVIDED =	1 ACCESSIBLE SPACE PROVIDED
BIKE PARKING REQUIRED:	
5% OF REQUIRED PARKING = 21 X 5%	1 BICYCLE PARKING REQUIRED
1 NEW CITY STD BIKE RACKS	1 BICYCLE PARKING PROVIDED

OTHER SPACES PROVIDED ON SITE:
1 LEVEL 1 ELECTRICAL VEHICLE WITH SIGN AND RE-CHARGE STATION PROVIDED

INTERIOR PARKING LOT LANDSCAPING REQUIRED:
REFER TO LANDSCAPE CALCULATIONS ON SHEET L-1.1

PLAN REVIEW NOTES FROM SALT LAKE CITY, DEPARTMENT OF COMMUNITY AND NEIGHBOR-HOODS:

1. ALL WORK IN THE PUBLIC WAY SHALL CONFORM TO APWA 2012 STANDARD PLANS AND SPECIFICATIONS.
2. THE CURB AND GUTTER SHALL BE CONSTRUCTED AS PER APWA 205A, AND 251 OR 252.
3. ALL UTILITY TRENCH WORK IN THE PUBLIC WAY SHALL BE CONSTRUCTED AS PER APWA 255.
4. ALL SIDEWALK WORK DONE IN THE PUBLIC WAY SHALL BE CONSTRUCTED AS PER APWA 231.
5. THE DRIVE APPROACH SHALL BE CONSTRUCTED AS PER APWA 225.
6. PRIOR TO OCCUPANCY PERMIT BEING ISSUED, IT IS RECOMMENDED THAT ALL TRIP HAZARDS ON THE PUBLIC SIDEWALK BE REMOVED.
7. FOR ANY REQUIRED STREET TREES, PLEASE CONTACT TONY GLIOT (801-972-7818) OR ONE OF HIS REPRESENTATIVES REGARDING THE INSTALLATION OR REMOVAL OF ANY STREET TREES.

04-25-17 - SLC DEPT PLAN REVIEWS AND OWNER VALUE ENGINEERING CORRECTIONS

James B. Glascock, Architect P.C.
Architecture ▪ Planning
4897 Rebecca Circle
Salt Lake City, Utah 84117
801 - 272 - 5133 e-mail: glascock@mtcon.net

STATE OF UTAH JAMES B. GLASCOCK 1036 LICENSED ARCHITECT 12/01/16

Project 15-027

REMODEL FOR:
SALT LAKE COSTUME BUILDING
1101 EAST 1700 SOUTH
SALT LAKE CITY, UTAH 841

Revisions

Date	
12/01/16	04-25-17

AS-1